CITY OF DALY CITY

Regular Meeting - PLANNING COMMISSION

AGENDA

Tuesday, October 4, 2022 - 7:00 PM

COVID-19 ANNOUNCEMENT - PUBLIC MEETINGS

Pursuant to Governor Newsom's Executive Order N-25-20, members of the Daly City Planning Commission and staff will participate in this meeting via a teleconference. Members of the public are encouraged to watch the meeting via Livestream (Planning Commission Meeting Livestream) athttps://bit.ly/dalycityoct4zoom and to submit comments through the livestream website and/or submit public comments via email to mvanlonkhuysen@dalycity.org prior to the public meeting.

To submit a comment in writing, please email cityclerk@dalycity.org and write "Public Comment" in the subject line. In the body of the email, include the item number and/or title of the item as well as your comments. All comments received by 4:00 pm will be emailed to the Planning Commission members and included as an "Add to Packet" on the City's website prior to the meeting. Those comments received after 4:00 pm will be added to the record and shared with the Planning commission members for the public meeting.

Persons with disabilities who require auxiliary aids or services in attending or participating in this meeting should call the office of the Planning Division at 991-8033 as soon as possible.

OPENING OF MEETING:

PLEDGE TO THE FLAG:

ROLL CALL:

APPROVAL OF MINUTES:

1. Approval of July 5, 2022 Virtual Planning Commission Meeting

PUBLIC HEARINGS:

2. **Variance VARC-5-22-1569** - The applicant requests a parking variance to allow the operation of a day care center at 92 Hill Street. A variance is possible due to the proposed center's proximity to transit (Colma BART).

AVAILABILITY OF PUBLIC RECORDS:

All public record to an open session item on this agenda, which are not exempt from disclosure pursuant to the California Public Records Act, that are distributed to a majority of the legislative body will be available for public inspection at the City Clerk's Office, City Hall located at 333 90th Street, Daly City, CA during normal business hours, at the same time that the public records are distributed or made available to the legislative body.

STAFF:

RECOMMENDATION:

3. **Variance VARC-5-22-15680** -The applicant requests a parking variance to allow the expansion of an existing restaurant at 6540 Mission Street. A variance is possible due to the proposed center's proximity to transit (Daly City BART/SamTrans).

STAFF:

RECOMMENDATION:

4. **Zone Change ZC-09-21-015237 -** Request to amend certain provisions of Planned Development Zone #47 related to the parking plan for the center and mandated delivery times for Manila Market.

STAFF:

RECOMMENDATION:

PUBLIC APPEARANCES, STAFF COMMUNICATIONS:

ACQUISITIONS, VACATIONS, ETC. - SECTION 65402(A)

ADJOURNMENT:

CITY OF DALY CITY
PLANNING COMMISSION
MEETING
(Virtual)
Draft
MINUTES

Tuesday, July 5, 2022 – 7:00 PM

http://bit.ly/dalycityjul5

OPENING OF MEETING:

PLEDGE TO THE FLAG:

ROLL CALL:

PRESENT: R. Crump, G. Pacheco, T. Proaño, R. V. Villanueva

MINUTES: Approval of Minutes of May 3, 2022

PUBLIC HEARING:

1. **Zone Change ZC-04-21-014994 and Design Review DR-04-21-014995** – A proposal to demolish a vacant retail building and construct a seven-story mixed-use building at 99 Southgate Avenue. The lower two stories would include a parking garage with 321 spaces and 10,800 square feet of retail space fronting Southgate Avenue. The upper five stories would include 214 apartment units and residential amenities. The proposal requires an amendment to Planned Development PD-60A. Pursuant to the requirement of the California Environmental Quality Act (CEQA), a Mitigated Negative Declaration has been prepared for the project. APN –2-201-140.

   Staff report presented by: Michael Van Lonkhuysen, Planning Manager

   On July 5, 2022, the Planning Commission voted 4-0 (Commissioner Satorre absent) to recommend the City Council approve the project.

   Moved by Commissioner Crump seconded by Commissioner Proaño to close the public hearing. Motion carried 4-0.

Moved by Commissioner Crump, seconded by Commissioner Pacheco to adopt the Mitigated Negative Declaration and the Mitigation Monitoring and Reporting Program Prepared for the project. Motion carried 4-0

Moved by Commissioner Crump, seconded by Commissioner Proaño, to recommend approval of Zone Change ZC-04-21-014994 and Design Review DR-04-21-014995 subject to the Conditions outlined in the staff report of July 5, 2022. Motion carried 4-0.
(Unanimous roll call vote).

2. **Variance VARC-06-22-015750.** The applicant, Eduardo Umadhay, requests a parking variance to allow a three-story 3,698 square foot addition to an existing three-story mixed-use building located at 6157 Mission Street. A variance is possible due to the proposed center's proximity to transit (Daly City BART/SamTrans/Muni). The project is Categorically Exempt from the California Environmental Quality Act (CEQA) under CEQA Guidelines Section 15303: Small Construction. APN 004-060-080

   Staff report presented by: Michael Van Lonkhuysen, Planning Manager

   On July 5, 2022, the Planning Commission voted 4-0 (Commissioners Satorre absent) to recommend the City Council approve Variance VARC-6-22-15750. The Planning Commission had no significant comments on the proposal and no members of the public offered any comments.

   Moved by Commissioner Proaño seconded by Commissioner Crump to close the public hearing. Motion carried 4-0.

   Moved by Commissioner Crump, seconded by Commissioner Pacheco, to adopt the findings as outlined in the staff report of July 5, 2022. Motion carried by 4-0

   Moved by Commissioner Proaño, seconded by Commissioner Crump to affirm the Environmental Assessment. Motion carried 4-0.

   Moved by Commissioner Crump, seconded by Commissioner Pacheco to recommend approval of Variance VARC-6-22-15750, as outlined in the staff report of July 5, 2022. Motion carried by 4-0 (unanimous roll call vote).

3. Variance VARC-5-22-15692. The applicant, Yan Ping Zhao, requests a parking variance to allow the operation of a day care center at 92 Hill Street. A Variance is possible due to the proposed center's proximity to transit (Colma BART). The project is exempt from CEQA per CEQA Guidelines Section 15061(B)(3) – review for Exemption. APN 006-364-050.

   (This item is being continued.)

PUBLIC APPEARANCES, STAFF COMMUNICATIONS:

ACQUISITIONS, VACATIONS, ETC. - SECTION 65402(A):

ADJOURNMENT: Moved by Commissioner Crump, seconded by Commissioner Pacheco to adjourn the meeting at 7:49 p.m.

For further information regarding the above projects or to obtain staff report for any of the above projects, please contact Michael Van Lonkhuysen at mvanlonkhuysen@dalycity.org. Persons with disabilities who require auxiliary aids or services in attending or participating in this meeting should notify the Office of the City Clerk at 991-8078 as early as possible.

Availability of Public Records: All public records relating to an open session item on this agenda, which are not exempt from disclosure pursuant to the California Public Records Act, that are distributed to a majority of the legislative body will be available for public inspection at the City Clerk's Office, City Hall located at 333 90th Street, Daly City, CA during normal business hours, at the same time that the public records are distributed or made available to the legislative body.

Draft

Daly City Planning Commission
Agenda Report

333 - 90th Street ◆Daly City ◆ California ◆ 94015 ◆ 650-991-8033

Meeting Date:	September 6, 2022
Application:	Variance VARC-5-22-15962
Project Planner:	Brian Paland
Project Location:	92 Hill Street (APN 006-364-050)
Project Description:	Parking variance to allow additional children at Day Care Center
Applicant:	Ping Zhao 117 Escanyo Drive South San Francisco, CA 94080
Property Owners:	Salem Mufarreh 599 Masonic Ave San Francisco, CA 94117
Environmental Assessment:	Exempt from the California Environmental Quality Act (CEQA), pursuant to CEQA Guidelines Section 15061 – Review for Exemption
Applicable Daly City Municipal Code Sections:	Chapter 17.18 – R1-B (Single Family District/BART Station Avea Specific Plan) Chapter 17.46 – Variances

Site Information

Property Sizes	Existing Use	Proposed Use	General Plan Designation	Current Zoning
9,834.25 sq. ft.	Vacant Space previously used by church	Day Care Center with up to 80 children	(C-N) Commercial Neighborhood	R1-B Residential Single Family/BART Specific Plan

Area Information

Land Use	Zoning
North: Commercial	R1-B: Single Family BART Specific Plan
South: Commercial	BC: BART Commerical
West: Freeway ROW	R1-B: Single Family BART Specific Plan
East: Mixed-Use (Residential Commercial)	R1-B: Single Family BART Specific Plan

Background

The applicant, Ping Zhoa, is requesting approval of a parking variance to allow the operation of a Day Care Center, serving up to 80 children and 8 staff members. (see Attachment A – Site Location).

The project site contains an existing 3,652 square foot building, most recently use as a church. Minor tenant improvement work is proposed for the interior, with the floor plan itself to remain unchanged. The parking area would be reconfigured to include parking for four vehicles, ADA accessible pathways, and an outdoor play area. (see Attachment B – Project Plans).

Variance

The proposed project would eliminate four on-site parking stalls to allow for an outdoor play area, leaving four parking stalls on-site. The Daly City Municipal Code requires one parking stall for each ten children and one stall for each staff member. The proposed use would require 16 parking stalls.

Daly City Municipal Code (DCMC) 17.46 Variances and California Government Code (CGC) Section 65906 govern the processing and review of the variance requests. The CGC 65906.5 also allows parking variances under specific circumstances when there are transit and public parking opportunities for commercial development.

> *Parking Variance California Government Code Section 65906.5:*
>
> *"Notwithstanding section 65906, a variance may be granted from the parking requirements of a zoning ordinance in order that some or all of the required parking spaces be located offsite, including locations in other local jurisdictions, or that in-lieu fees or facilities be provided instead of the required parking spaces, if both the following conditions are met: (a) The variance will be an incentive to, and a benefit for, the nonresidential development; and (b) The variance will facilitate access to the nonresidential development by patrons of public transit facilities, particularly guideway facilities."*

There are ample public parking opportunities within 500 feet from the project site. Furthermore, there are nearby SamTrans public transportation hubs on Junipero Serra, across the street and within 1,000 feet from the project site. The Colma BART station is within one-half mile of the project. Public transit riders will have ease of access to the proposed expanded Day Care Center. Due to the availability of parking opportunities and nearby public transit to serve the project site, staff feels that granting of the variance would be an incentive to the community.

The Zoning Ordinance requires the application for a variance to be presented to the Planning Commission for recommendation to the City Council. The City Council may then approve or deny the variance request. DCMC 17.46.050 requires that the following findings (in italics) be made by the Planning Commission:

> *A. That because of exceptional conditions applicable to the subject property, including size, shape, topography, location or surroundings, the strict application of this title is found to deprive subject property of privileges enjoyed by other properties in the vicinity and under identical zoning district classification.*

There are similar uses operating on properties both immediately adjacent to and within the vicinity of the project site along the Hill Street frontage that provide limited on-site parking. While the proposed use as a Day Care Center would increase the building's parking requirement, staff and the applicant both feel that the space would be better used as an outdoor play area for the children. The issuance of the variance would therefore effectively place the subject building in parity with other buildings and uses within the neighborhood.

> *B. That the variance authorized does not constitute a grant of special privilege inconsistent with the limitations upon other properties in the vicinity and under identical zoning district classification.*

Strict application of the parking regulations would deprive the subject property of the same privileges enjoyed by other properties within the vicinity in the same zoning district. The proposed use provides a benefit to the community, by providing easily accessible child care to working parents within the vicinity of the Colma Bart Station. As a result, a variance is requested to allow the tenant improvement.

> *C. That in the coastal zone the variance authorized is consistent with the policies, maps and public access component of the local coastal plan.*

The project site is not within the coastal zone.

Environmental Assessment

Staff has reviewed the proposal under the requirements of the California Environmental Quality Act (CEQA) and has determined that the project, as conditioned, is exempt from the California Environmental Quality Act (CEQA), pursuant to CEQA Guidelines Section 15061 – Review for Exemption. There is no potential for environmental impacts caused by the project.

Findings

As conditioned, the proposed Variance VARC-5-22-15692 complies with Title 17 (Zoning) of the Daly City Municipal Code. Approval of the proposed Variance would not be detrimental to the health, safety, morals, comfort and general welfare of persons residing or working in the neighborhood. The proposed use will not be injurious or detrimental to the property and improvements in the neighborhood or the general welfare of the city. These findings are based on the following facts:

1. In accordance with Title 17 of the Daly City Municipal Code, as well as applicable State zoning enabling legislation, the Planning Commission conducted a public hearing on September 6, 2022. Legal public notice of said hearing was provided by newspaper

publication on Thursday, June 23, 2022, posting and via first class mailing to property owners within 300 feet of the site.

2. Staff has reviewed the proposal under the requirements of the California Environmental Quality Act (CEQA) and has determined the project is exempt from the California Environmental Quality Act (CEQA), pursuant to CEQA Guidelines Section 15061 – Review for Exemption. There is no potential for environmental impacts caused by the project.

3. The proposed project is consistent with Zoning Regulations Chapter 17.46, Variances, and State Government Code 65906.5 in that the proposed use with the applicable parking variance granted, will provide an incentive to the commercial development.

4. There are similar uses operating on properties both immediately adjacent to and within the vicinity of the project site along the Hill Street frontage that provide limited on-site parking. While the proposed use as a Day Care Center would increase the building's parking requirement, staff and the applicant both feel that the space would be better used as an outdoor play area for the children. The issuance of the variance would therefore effectively place the subject building in parity with other buildings and uses within the neighborhood.

5. The subject property is not being granted a special privilege in that other properties within the vicinity of the subject property have commercial and residential uses where similar site limitations exist and where no or reduced on-site parking is available due substantial building lot coverage and where public parking and transit proximity provides the parking opportunities to serve the uses in accordance with Daly City Zoning Regulations and State Law.

Conditions of Approval

The following conditions of approval shall apply to the use for the entirety of its existence.

1. A sign permit shall be required for the signage prior to installation. Review and approval by the Planning Division prior to sign permit issuance is required.

2. Variance is applicable to approved floor plan as attached and changes require additional Planning review and/or City Council review or both.

3. The Variance shall be valid for a period of one year from the date of City Council approval. The approval shall terminate if a Building Permit has not been obtained and construction commenced within one-year of City Council approval of the project.

4. The fence related to the outdoor play area shall not encroach into the public right of way.

STAFF RECOMMENDATION

Staff recommends that the Planning Commission forward to the City Council the following actions:

1. Adopt the Findings as outlined herein;
2. Affirm the Environmental Assessment;
3. Approve Variance VARC-5-22-15692, subject to the Findings and Conditions outlined herein.

Respectfully submitted,

Brian Paland
Assistant Planner

Tatum Mothershead
Director of Economic and Community Development

Attachments

Attachment A – Location Map
Attachment B – Project Plans

Location Map

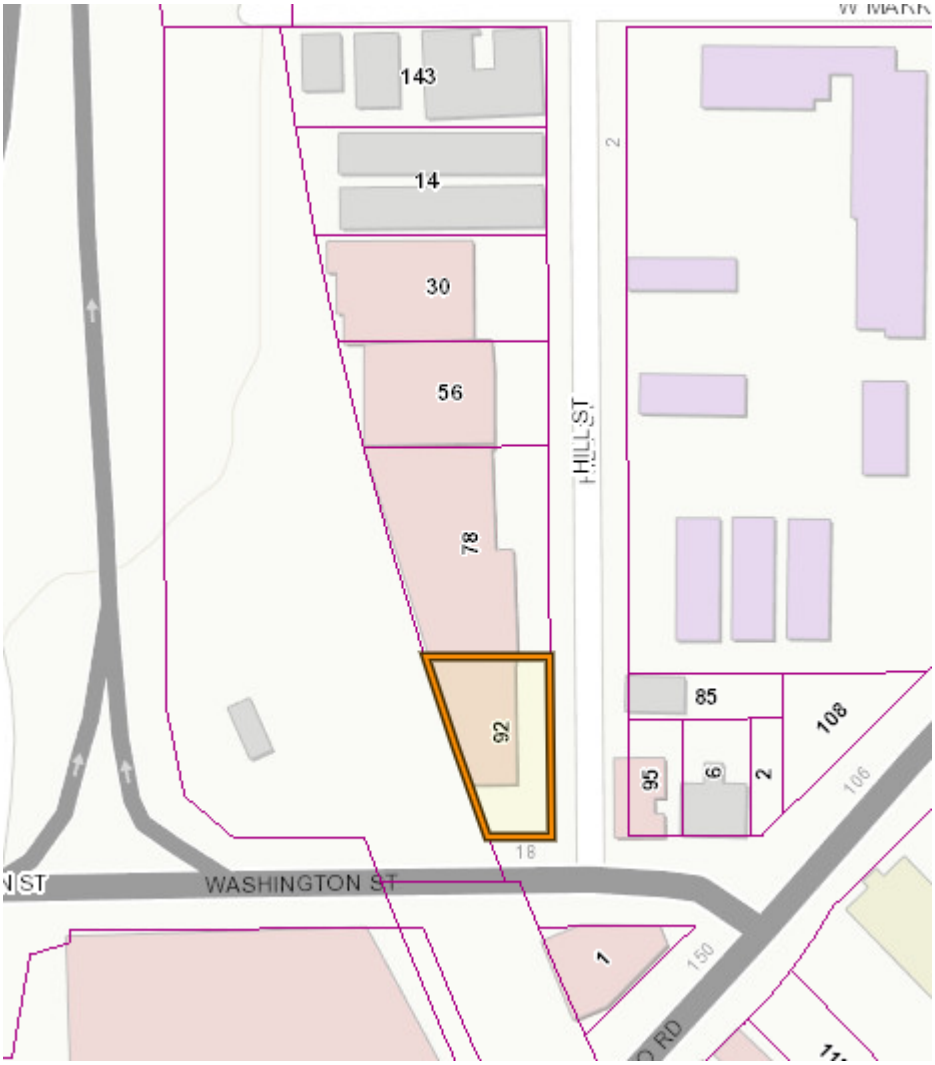

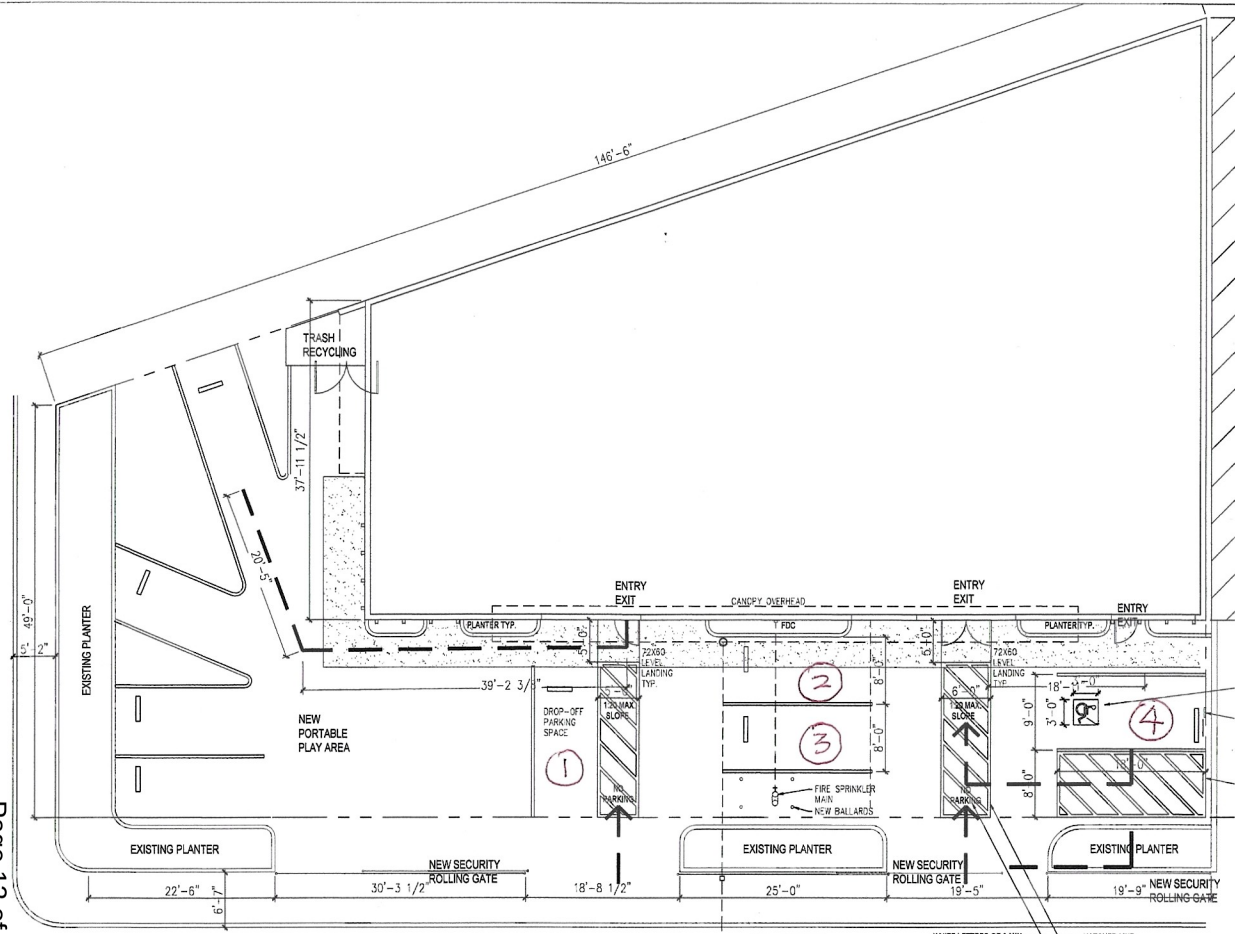

1 PROPOSED SITE PLAN
SCALE : 3/16"=1'-0"

Daly City Planning Commission
Agenda Report

333 - 90th Street ◆Daly City ◆ California ◆ 94015 ◆ 650-991-8033

Meeting Date:	October 4, 2022
Application:	Variance VARC-5-22-15680
Project Planner:	Brian Paland
Project Location:	6540 Mission Street (APN 003-131-170)
Project Description:	Parking variance to allow an increase in occupancy from 12 to 49 patrons at existing restaurant
Applicant:	Rhuan Martins 6540 Mission Street Daly City, CA 94015
Property Owners:	John Agelopoulos 1827 Hillman Ave. Belmont, CA 94002
Environmental Assessment:	Exempt from the California Environmental Quality Act (CEQA), pursuant to CEQA Guidelines Section 15061 – Review for Exemption
Applicable Daly City Municipal Code Sections:	Chapter 17.18 – C1 (Light Commercial) Chapter 17.46 – Variances

Site Information

Property Sizes	Existing Use	Proposed Use	General Plan Designation	Current Zoning
4,000 sq. ft.	Restaurant with seating for up to 12 patrons	Restaurant with seating for up to 39 patrons	(CMU) Commercial Mixed-Use	C1 Light Commercial

Area Information

Land Use	Zoning
North: Commercial	C1 Light Commercial
South: Commercial	C1 Light Commercial
West: Residential	R1-A: Single Family/Duplex
East: Mixed-Use (Residential Commercial)	PD59: Planned Development

Background

The applicant, Rhuan Martins, is requesting approval of a parking variance to allow an increase in the number of patrons for in-person dining at the existing restaurant, from 12 to 39 patrons, located at 6540 Mission Street (see Attachment A – Site Location).

The project site contains an existing 1,657 square foot building, previously used as a social club and recently remodeled to a restaurant serving up to 12 patrons for on-site dining. Minor tenant improvement work is proposed for the interior, which would include adding seating for up to 39 patrons (see Attachment B – Project Plans).

Variance

There are currently five on-site parking stalls as part of a shared parking lot, with of total of 19 spaces. The Daly City Municipal Code requires one parking stall for each 125 square feet of gross floor area for restaurants. The proposed use would require 13 parking stalls. The applicant is requesting a variance for eight parking stalls.

Daly City Municipal Code (DCMC) 17.46 Variances and California Government Code (CGC) Section 65906 govern the processing and review of the variance requests. The CGC 65906.5 also allows parking variances under specific circumstances when there are transit and public parking opportunities for commercial development.

> *Parking Variance California Government Code Section 65906.5:*
>
> *"Notwithstanding section 65906, a variance may be granted from the parking requirements of a zoning ordinance in order that some or all of the required parking spaces be located offsite, including locations in other local jurisdictions, or that in-lieu fees or facilities be provided instead of the required parking spaces, if both the following conditions are met: (a) The variance will be an incentive to, and a benefit for, the nonresidential development; and (b) The variance will facilitate access to the nonresidential development by patrons of public transit facilities, particularly guideway facilities."*

There are ample public parking opportunities within 500 feet from the project site. Furthermore, there are nearby SamTrans public transportation hubs on Mission Street. The Daly City BART station is within one-half mile of the project. Historically, the Redevelopment Agency had granted parking waivers for businesses on Mission Street, but the agency was dissolved. Due to the availability of parking opportunities and nearby public transit to serve the project site, staff feels that granting of the variance would be an incentive to the community.

The Zoning Ordinance requires the application for a variance to be presented to the Planning Commission for recommendation to the City Council. The City Council may then approve or deny the variance request. DCMC 17.46.050 requires that the following findings (in italics) be made by the Planning Commission:

A. That because of exceptional conditions applicable to the subject property, including size, shape, topography, location or surroundings, the strict application of this title is found to deprive subject property of privileges enjoyed by other properties in the vicinity and under identical zoning district classification.

There are similar uses operating on properties both immediately adjacent to and within the vicinity of the project site along the Mission Street frontage that provide limited on-site parking. While the proposed use as a full service restaurant would increase the building's parking requirement, staff and the applicant both feel that the community and the business itself would be better served by a full service restaurant. The issuance of the variance would therefore effectively place the subject building in parity with other buildings and uses within the neighborhood.

B. That the variance authorized does not constitute a grant of special privilege inconsistent with the limitations upon other properties in the vicinity and under identical zoning district classification.

Strict application of the parking regulations would deprive the subject property of the same privileges enjoyed by other properties within the vicinity in the same zoning district. The proposed use provides a benefit to the community, by promoting business along the Mission Street corridor. As a result, a variance is requested to allow the tenant improvement.

C. That in the coastal zone the variance authorized is consistent with the policies, maps and public access component of the local coastal plan.

The project site is not within the coastal zone.

Environmental Assessment

Staff has reviewed the proposal under the requirements of the California Environmental Quality Act (CEQA) and has determined that the project, as conditioned, is exempt from the California Environmental Quality Act (CEQA), pursuant to CEQA Guidelines Section 15061 – Review for Exemption. There is no potential for environmental impacts caused by the project.

Findings

As conditioned, the proposed Variance VARC-5-22-15680 complies with Title 17 (Zoning) of the Daly City Municipal Code. Approval of the proposed Variance would not be detrimental to the health, safety, morals, comfort and general welfare of persons residing or working in the neighborhood. The proposed use will not be injurious or detrimental to the property and improvements in the neighborhood or the general welfare of the city. These findings are based on the following facts:

1. In accordance with Title 17 of the Daly City Municipal Code, as well as applicable State zoning enabling legislation, the Planning Commission conducted a public hearing on October 4, 2022. Legal public notice of said hearing was provided by newspaper

publication on Thursday, September 22, 2022, posting and via first class mailing to property owners within 300 feet of the site.

2. Staff has reviewed the proposal under the requirements of the California Environmental Quality Act (CEQA) and has determined the project is exempt from the California Environmental Quality Act (CEQA), pursuant to CEQA Guidelines Section 15061 – Review for Exemption. There is no potential for environmental impacts caused by the project.

3. The proposed project is consistent with Zoning Regulations Chapter 17.46, Variances, and State Government Code 65906.5 in that the proposed use with the applicable parking variance granted, will provide an incentive to the commercial development.

4. There are similar uses operating on properties both immediately adjacent to and within the vicinity of the project site along the Mission Street frontage that provide limited on-site parking. While the proposed use as a full service restaurant would increase the building's parking requirement, staff and the applicant both feel that the project will increase the business opportunity along Mission Steet. The issuance of the variance would therefore effectively place the subject building in parity with other buildings and uses within the neighborhood.

5. The subject property is not being granted a special privilege in that other properties within the vicinity of the subject property have commercial and residential uses where similar site limitations exist and where no or reduced on-site parking is available due substantial building lot coverage and where public parking and transit proximity provides the parking opportunities to serve the uses in accordance with Daly City Zoning Regulations and State Law.

Conditions of Approval

The following conditions of approval shall apply to the use for the entirety of its existence.

1. A sign permit shall be required for the signage prior to installation. Review and approval by the Planning Division prior to sign permit issuance is required.

2. Variance is applicable to approved floor plan as attached and changes require additional Planning review and/or City Council review or both.

3. The Variance shall be valid for a period of one year from the date of City Council approval. The approval shall terminate if a Building Permit has not been obtained and construction commenced within one-year of City Council approval of the project.

STAFF RECOMMENDATION

Staff recommends that the Planning Commission forward to the City Council the following actions:

1. Adopt the Findings as outlined herein;
2. Affirm the Environmental Assessment;
3. Approve Variance VARC-5-22-15680, subject to the Findings and Conditions outlined herein.

Respectfully submitted,

Brian Paland
Assistant Planner

Tatum Mothershead
Director of Economic and Community Development

Attachments

Attachment A – Location Map
Attachment B – Project Plans

70
2
THETA AVE
350
6500
97
85
77
65
53
41
29
17
6512
6524
MISSION ST
SANTA BARBARA AVE
363
369
6540
375
6548
381
6556
6564

GENERAL NOTES

1. CONTRACTOR SHALL ADHERE TO ALL CODES, RULES, AND REGULATIONS GOVERNING CONSTRUCTION, BUILDING ACCESS AND THE USE OF FACILITIES AS SET BY LOCAL BUILDING DEPARTMENT AGENCY AND THE BUILDING OWNERS. TITLE 24 C.A.C ESPECIALLY THOSE ABSTRACTS DEALING WITH ENERGY AND HANDICAPPED ACCESS REQUIREMENTS. ANYTHING SHOWN ON THESE DRAWINGS, NOT IN ACCORDANCE WITH THESE RULES AND REGULATIONS, SHALL BE BROUGHT TO THE ATTENTION OF THE DESIGNER BEFORE PROCEEDING WITH ANY WORK.
2. DRAWINGS SHALL NOT BE SCALED FOR DIMENSIONAL INFORMATION.
3. THE CONTRACTOR AND SUBCONTRACTORS SHALL VERIFY ALL CONDITIONS AND DIMENSIONS IN THE FIELD. IT SHALL BE THE RESPONSIBILITY OF THE CONTRACTOR TO NOTIFY THE DESIGNER OF ANY CONFLICTS HEREIN, EITHER APPARENT OR OBVIOUS PRIOR TO START OF WORK ON THAT ITEM OR BEAR THE RESPONSIBILITY OF CORRECTING SUCH WORK AS DIRECTED BY THE ARCHITECT.
4. ALL WORK SHALL BE DONE IN A FIRST CLASS WORKMANLIKE MANNER BY MECHANICS SKILLED IN THEIR RESPECTIVE TRADES.
5. THE CONTRACTOR SHALL REVIEW PLANS AND THE AREA OF CONSTRUCTION CAREFULLY TO INSURE FULL UNDERSTANDING OF EXACT SCOPE OF WORK. THE ARCHITECT WILL BE AVAILABLE TO REVIEW ALL WORK ON SITE AND RESOLVE ANY UNCLEAR ITEMS
6. THE CONTRACTOR SHALL CONTACT THE BUILDING MANAGEMENT TO BE ADVISED OF THE RULES OF THE BUILDING WITH RESPECT TO CONSTRUCTION, WHEN AND HOW DELIVERIES AND/OR REMOVALS CAN BE DONE ON REGULAR OR OVERTIME AND IN GENERAL, ANY BUILDING REQUIREMENTS WHICH WILL AFFECT THEIR WORK.
7. THE CONTRACTOR SHALL SUBMIT TO THE ARCHITECT ALL FABRICATION SHOP DWGS. AND FIXTURE CUTS FOR APPROVAL AFTER HAVING CHECKED AND APPROVED THEM FIRST, WHERE APPLICABLE
8. THE CONTRACTOR SHALL FURNISH A SYSTEM OF TEMPORARY LIGHTS AND WATER THROUGHOUT THE SPACE UNDER CONSTRUCTION, IF REQUIRED.
9. THE CONTRACTOR SHALL REMOVE FROM THE BUILDING ALL RUBBISH AND WASTE MATERIALS, FOR HIS OWN SUBCONTRACTING. IF REQUIRED.
10. NO WORK DEPENDING ON PARTITION LOCATIONS SHALL BE DONE UNTIL THE CONTRACTOR HAS MARKED PARTITION LOCATIONS ON THE FLOOR SLAB IN THE FIELD AND THE ARCHITECT HAS APPROVED THEM.
11. THE CONTRACTOR SHALL LEAVE THE PREMISES IN A CLEAN AND ORDERLY MANNER.
12. THE CONTRACTOR'S PRICE IS TO BE COMPLETE IN ALL WAYS INCLUDING TAXES, OVER-TIME, SHIPPING, ETC.
13. ALL MATERIALS AND INSTALLATIONS SHALL BE IN ACCORDANCE WITH MANUFACTURER'S LATEST PRINTED SPECIFICATIONS AND WITH CODE REQUIREMENTS.
14. THE WORK INCLUDED UNDER THIS CONTRACT SHALL BE DONE IN ACCORDANCE WITH AIA GENERAL CONDITIONS DOCUMENT A-201, 1991 EDITION.
15. CONTRACTORS, SUBCONTRACTORS AND SUPPLIERS SHALL GUARANTEE THAT THE WORK IS FREE FROM ANY DEFECTS IN WORKMANSHIP AND MATERIALS FOR A PERIOD OF ONE YEAR FROM DATE OF COMPLETION AND BE RESPONSIBLE FOR REPAIR OR REPLACEMENT AT NO ADDITIONAL CHARGE.
16. CONTRACTORS TO CARRY EMPLOYER'S LIABILITY INSURANCE OF NOT LESS THAN $1,000,000 PER OCCURRENCE, AND COMPREHENSIVE GENERAL LIABILITY OF AT LEAST $2,000,000 COMBINED SINGLE LIMIT FOR BODILY INJURY, DEATH, OR PROPERTY DAMAGE THE POLICIES TO ALSO COVER LANDLORD AND TENANT AS ADDITIONAL INSURED.

DRAWING INDEX

A0.0	COVER SHEET
A0.1	DISABLED ACCESS GUIDELINES
A0.2	ACCESSIBILITY REQUIREMENTS
A1.0	PROPOSED PLANS – AS-APPROVED
A2.0	AS-APPROVED/ PROPOSED FIRST FLOOR PLAN

SCOPE OF WORK

REVISION TO APPROVED RESTAURANT BPA #086970 TO INCREASE OCCUPANT LOAD FROM 12 OCCUPANTS TO THE MAXIMUM OF 49 OCCUPANTS.

BUILDING INFO

OCCUPANCY GROUP: M & B

TYPE OF CONSTRUCTION: V-B

AREA OF WORK: 576 SQ. FT.

NUMBER OF STORIES: 1-STORY & BASEMENT

NOTE: MAIN LEVEL, SOCIAL CLUB IS 1662 SQ. FT. THE AREA OF WORK IS AT THE EXISTING KITCHEN AND THE NEW COUNTER AREA. MAIN LEVEL HAS TWO MEANS TO EGRESS TO A PUBLIC RIGHT OF WAY, AND FULLY WITH SPRINKLERS.

DEFERRED SUBMITTAL

1 FIRE SUPPRESSION SYSTEMS
2 FIRE ALARM
3 FIRE SPRINKLERS
4 TYPE-1 HOOD AND DUCT WORK

VICINITY MAP

CODE CYCLE

- 2019 CALIFORNIA BUILDING CODE
- 2019 CALIFORNIA ELECTRIC CODE
- 2019 CALIFORNIA MECHANICAL CODE
- 2019 CALIFORNIA PLUMBING CODE
- 2019 CALIFORNIA FIRE CODE
- 2019 CALIFORNIA ENERGY CODE
- 2019 DALY CITY MUNICIPAL CODE

SYMBOLS

- 1/A4 — SECTION DRAWING SHEET NUMBER
- 1/A5 — ELEVATION DRAWING SHEET NUMBER
- 1/A4 — DETAIL DRAWING SHEET NUMBER
- UP / LEFT A3 RIGHT / DOWN — IINTERIOR ELEVATION SHEET NUMBER DRAWING NUMBER
- 1 — DOOR NUMBER
- X/12 — EQUIPMENT SYMBOL EQUIPMENT TYPE EQUIPMENT GROUP
- 1 — REVISION
- 1 — WALL TYPE
- F-1 — FINISH SYMBOL
- MATCH LINE SHADED PORTION IS SIDE CONSIDERED
- DATUM POINT
- 1 — WINDOW NUMBER

ABBREVIATIONS

&	AND
L	ANGLE
@	AT
(E)	EXISTING
ACOUS.	ACOUSTICAL
A.D.	AERA DRAIN
ADJ.	ADJUSTABLE
AGGR.	AGGREGATE
AL.	ALUMINUM
APPROX.	APPROXIMATE
ARCH.	ARCHITECTURAL
ASB.	ASBESTOS
ASPH.	ASPHALT
BD.	BOARD
BITUM.	BITUMINOUS
BLDG.	BUILDING
BLK.	BLOCK
BLKG.	BLOCKING
BM.	BEAM
BOT.	Bottom
CAB.	Cabinet
C.B.	Catch Basin
CEM.	Cement
CER.	Ceramic
C.I.	Cast iron
C.G.	Corner Guard
CLG.	Ceiling
CLKG.	Calking
CLO.	Closet
CLR.	Clear
C.O.	Cased Opening
COL.	Column
CONC.	Concrete
CONN.	Connection
CONSTR.	Construction
CONT.	Continuous
CORR.	Corridor
CTSK.	Countersunk
CNTR.	Counter
CTR.	Center
DBL.	Double
DEPT.	Department
DET.	Detail
DIA.	Diameter
DIM.	Dimension
DISP.	Dispenser
DN.	Down
D.O.	Door Opening
DR.	Door
DWR.	Drawer
DS.	Downspout
D.S.P	Dry Standpipe
DWG.	Drawing
E.	East
EA.	Each
E.J.	Expansion Joint
EL.	Elevation
ELEC.	Electrical
ELEV.	Elevator
EMER.	Emergency
ENCL.	Enclosure
EQ.	Equal
EQPT.	Equipment
(E)	Existing
EXPO.	Exposed
EXP.	Expansion
EXT.	Exterior
F.A.	Fire Alarm
F.B.	Flat Bar
F.D.	Floor Drain
FDN.	Foundation
F.E.	Fire Extinguisher
FIN.	Finish
FL.	Floor
FLASH.	Flashing
FLUOR.	Fluorescent
F.O.C.	Face of Concrete
F.O.F.	Face of Finish
F.O.S.	Face of Studs
FPRF.	Fireproof
F.S.	Full Size
FT.	Foot or Feet
FTG.	Footing
FURR.	Furring
FUT.	Future
GA.	Gauge
GALV.	Galvanized
G.B.	Grab Bar
GL.	Glass
GND.	Ground
GR.	Grade
GYP.	Gypsum
H.B.	Hose Bibb
H.C.	Hollow Care
HDWD.	Hardwood
H.M.	Hollow Metal
HORIZ.	Horizontal
HR.	Hour
HGT.	Height
INSUL.	Insulation
INT.	Interior
JAN.	Janitor
JT.	Joint
KIT.	Kitchen
LAB.	Labotory
LAM.	Laminate
LAV.	Lavatory
LT.	Light
MAX.	Maximum
MECH.	Mechanical
MEMB.	Membrane
MET.	Metal
MFR.	Manufacturer
MIN.	Minimum
MISC.	Miscellaneous
M.O.	Masonry Opening
MTD.	Mounted
MUL.	Mullion
(N)	New
N.	North
N.I.C.	Not In Contract
NO./#	Number
NOM.	Nominal
N.T.S.	Not To Scale
O.C.	On Center
OPNG.	Opening
OPP.	Opposite
PRCST.	Pre-cast
PL.	Plate
P.LAM.	Plastic Laminate
PLAS.	Plaster
PLYWD.	Plywood
PR.	Pair
PT.	Point
PTN.	Partition
Q.T.	Quarry Tile
R.	Riser
RAD.	Radius
R.D.	Roof Drain
REF.	Refrence
REFR.	Refrigerator
RGTR.	Register
REINF.	Reinforced
REQ.	Required
RESIL.	Resilient
RM.	Room
R.O.	Rough Opening
R.W.L.	Rain Water Leader
S.	South
S.C.	Solid Care
SCHED.	Schedule
SECT.	Section
SHR.	Shower
SHT.	Sheet
SIM.	Similar
SPEC.	Specifacation
SQ.	Square
S.ST.	Stainless Steel
S.SK.	Service Sink
STA.	Station
STD.	Standard
STL.	Steel
STOR.	Storage
STRL.	Structural
SUSP.	Suspended
SYM.	Symmetrical
T.B.	Towel Bar
T.C.	Top Of Curb
TEL.	Telephone
TER.	Terrazzo
T.&G.	Tongue And Groove
THK.	Thick
T.P.	Top Of Pavement
T.V.	Television
T.W.	Top Of Wall
TYP.	Typical
UNF.	Unfinished
U.O.N.	Unless Otherwise Noted
UR.	Urinal
VERT.	Vertical
VEST.	Vestibule
W.	West
W/	With
W.C.	Water Closet
WD.	Wood
W/O	Without
WP.	Waterproof
WSCT.	Wainscot
WT.	Weight

SHATARA
ARCHITECTURE INC.

890 7TH ST.
SAN FRANCISCO
CA 94107

TEL (415) 512-7566
suheil@shataraarch.com

DRAWINGS AND SPECIFICATIONS, AS INSTRUMENTS OF PROFESSIONAL SERVICE, ARE AND SHALL REMAIN THE PROPERTY OF THE ARCHITECT.

THESE DOCUMENTS ARE NOT TO BE USED, IN WHOLE OR IN PART, FOR ANY PROJECTS OR PURPOSES WHATSOEVER, WITHOUT THE PRIOR SPECIFIC WRITTEN AUTHORIZATION OF SHATARA ARCHITECTURE INC.

PROJECT
TENANT IMPROVEMENT

ADDRESS
6540 MISSION STREET
DALY CITY, CA

APN: 003131170

PROJECT DIRECTORY

ARCHITECT
SHATARA ARCHITECTURE INC.

890 7TH STREET
SAN FRANCISCO, CA 94107
TEL: 415-512-7566
CONTACT: SUHEIL SHATARA

BUILDING	07-26-2021
BUILDING	09-16-2021
BUILDING	12-10-2021
PLANNING	03-08-2022

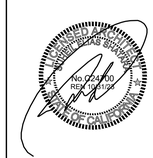

SHEET DESCRIPTION
COVER SHEET

A0.0

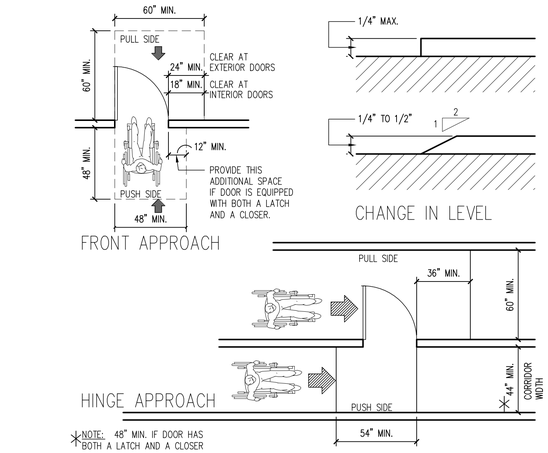

1 LEVEL MANEUVER'G CLR. @ DR.
SCALE 1/4" = 1'-0"

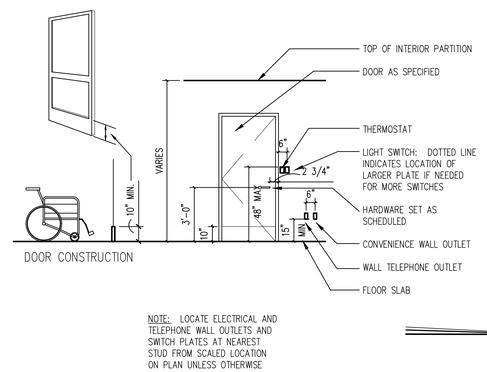

2 TYP. DOOR MOUNTING HEIGHTS
SCALE 1/4" = 1'-0"

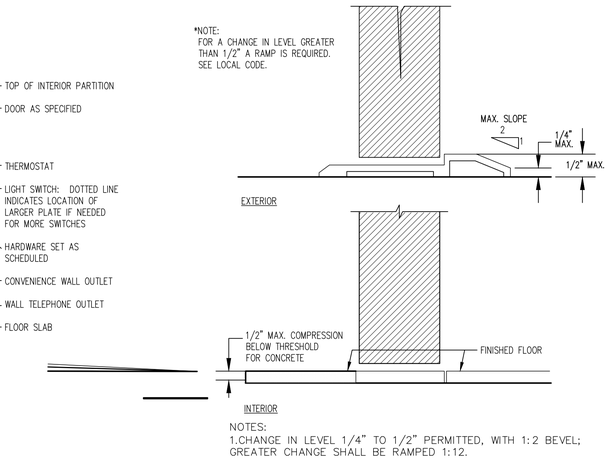

3 THRESHOLD
SCALE 1" = 1'-0"

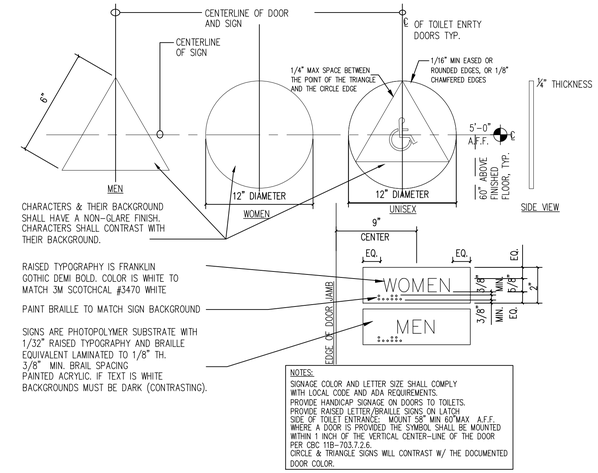

4 TOILET RM. DOOR SIGNAGE
SCALE 1 1/2" = 1'-0"

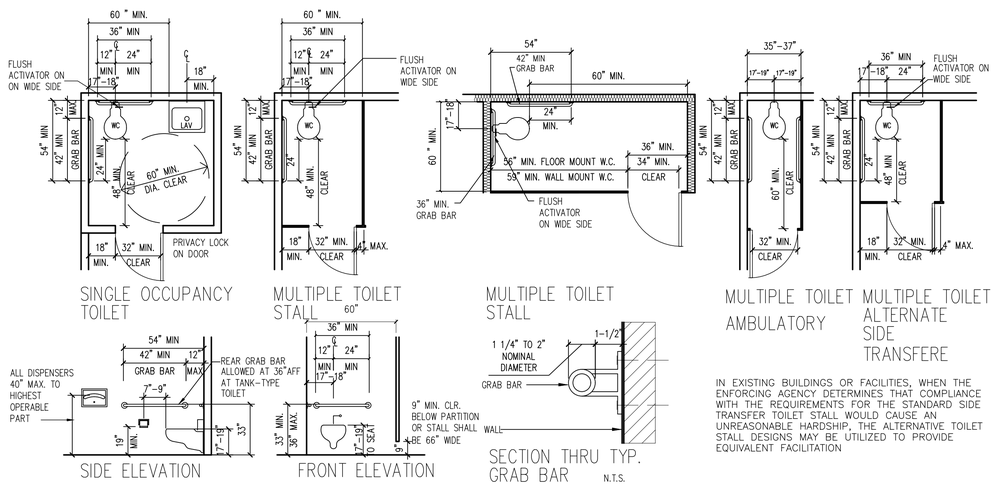

5 ACCESSIBLE TOILETS
SCALE 1/4" = 1'-0"

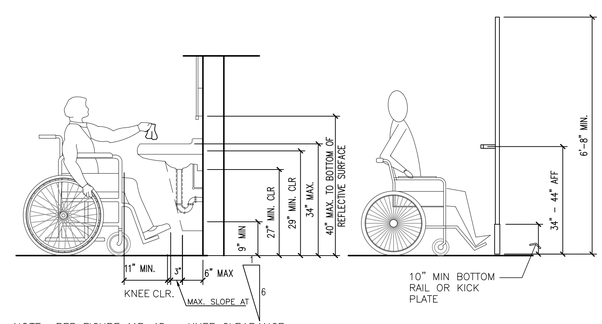

6 TYP. ACCESSIBLE SINK
SCALE: 1/4"=1'-0"

7 ADA DOOR REQUIREMENT
SCALE: 1/4"=1'-0"

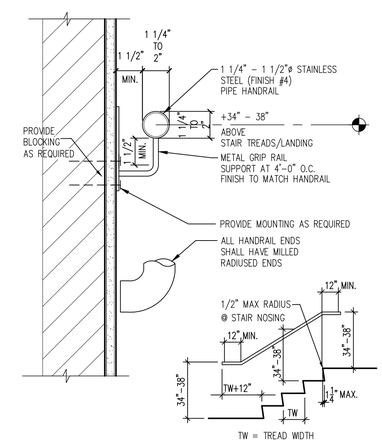

8 STAIR HANDRAIL
SCALE 3" = 1'-0"

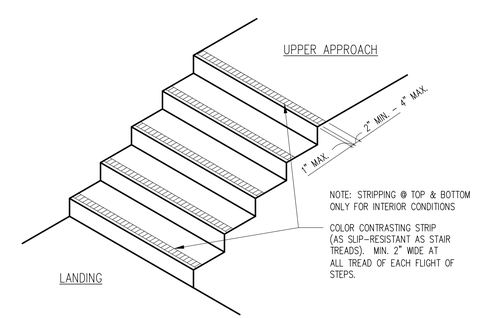

9 TITLE 1

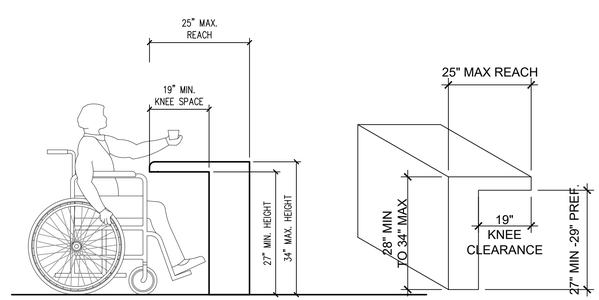

10 ACCESSIBLE COUNTER
SCALE: 1/4"=1'-0"

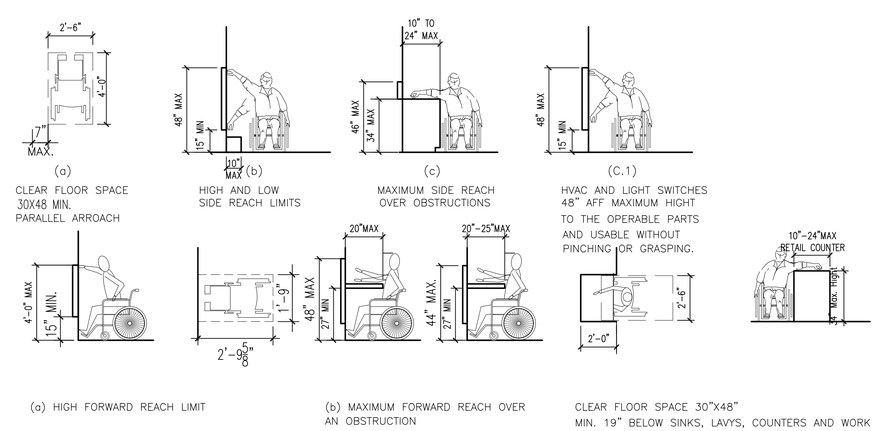

11 TYPICAL REACH DIMENSIONS

12 ACCESSIBLE RETAIL COUNTER
SCALE: 1/4"=1'-0"

SHATARA
ARCHITECTURE INC.

890 7TH ST.
SAN FRANCISCO
CA 94107

TEL (415) 512-7566
suheil@shataraarch.com

DRAWINGS AND SPECIFICATIONS, AS INSTRUMENTS OF PROFESSIONAL SERVICE, ARE AND SHALL REMAIN THE PROPERTY OF THE ARCHITECT.

THESE DOCUMENTS ARE NOT TO BE USED, IN WHOLE OR IN PART, FOR ANY PROJECTS OR PURPOSES WHATSOEVER, WITHOUT THE PRIOR SPECIFIC WRITTEN AUTHORIZATION OF SHATARA ARCHITECTURE INC.

PROJECT
TENANT IMPROVEMENT

ADDRESS
6540 MISSION STREET
DALY CITY, CA

APN: 003131170

PROJECT DIRECTORY

ARCHITECT
SHATARA ARCHITECTURE INC.

890 7TH STREET
SAN FRANCISCO, CA 94107
TEL: 415-512-7566
CONTACT: SUHEIL SHATARA

BUILDING	07-26-2021
BUILDING	09-16-2021
BUILDING	12-10-2021
PLANNING	03-08-2022

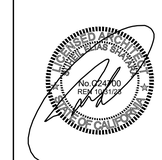

SHEET DESCRIPTION
DISABLED ACCESS GUIDELINES

A0.1

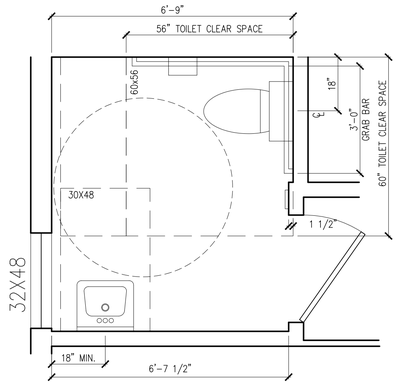

1 ENLARGED ACCESSIBLE TOILET PLAN

SCALE : 1/2"=1'-0"

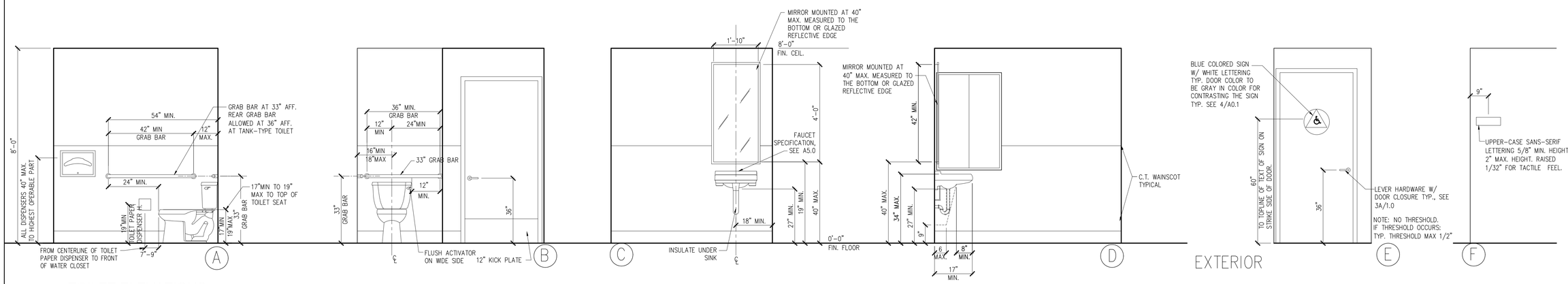

2 TOILET ELEVATIONS

SCALE : 1/2"=1'-0"

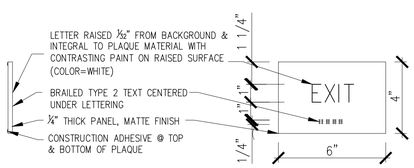

3 "EXIT" SIGN

SCALE : 3"=1'-0"

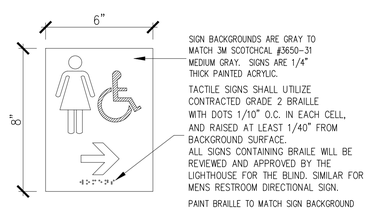

4 DIRECTIONAL SIGNAGE

SCALE : 3"=1'-0"

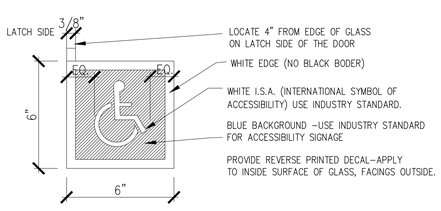

5 ISA DECAL (TACTILITY NOT REQUIRED

SCALE : 3"=1'-0"

TYPICAL SIGNAGE NOTES

1. ALL SIGN COMPONENTS SHALL BE INSTALLED WITH PERMANENT ADHESIVE TO PROVIDE DURABLE SIGNANGE WITH NO DELAMINATION.

2. WALL MOUNTED SIGNS SHALL BE INSTALLED WITH THE CENTERLINE OF SIGN AT 60 A.F.F. U.O.N

3. ROOM IDENTIFICATION SIGNS SHALL BE MOUNTED ON THE LATCH SIDE OF THE DOOR, UNLESS IF THERE IS INSUFFICIENT SPACE, IN WHICH CASE SIGN MAY BE MOUNTED ON THE HINGE SIDE.

4. TACTILE SIGNS SHALL COMPLY WITH A.D.A RECOMMENDATIONS. TEXT SHALL BE SANS-SERIF UPPERCASE CHARACTERS AT LEAST 5/8" HIGH AND RAISED 1/32" FROM BACKGROUND SURFACE.

5. TACTILE SIGNS SHALL UTILIZE CONTRACTED GRADE 2 BRAILLE WITH DOTS 1/10" O.C. IN EACH CELL, AND RAISED AT LEAST 1/40" FROM BACKGROUND SURFACE.

6. PICTORGRAM'S BORDER DIMENSION SHALL BE AT LEAST 6" HIGH AND EACH DIRECTLY SHALL BE ACCOMPANIED BY THE EQUIVALENT VERBAL DESCRIPTION PLACED DIRECTLY BELOW THE PICTOGRAM.

7. FONT FOR ALL TEXT SHALL BE UNIVERSE 57 CONDESED AS SHOWN IN DETAILS .

8. ARCHITECT TO PROVIDE DIGITAL FILES AS REQUIRED BY SIGNAGE FABRICATOR

9. SAMPLES AND VERIFICATION OF SIGNAGE SHALL BE REQUIRED TO ENSURE COMPLIANCE

10. ALL SIGNS CONTAINING BRAILE WILL BE REVIEWED AND APPROVED BY THE LIGHTHOUSE FOR THE BLIND.

11. ALL SIGNS TO BE CLEAR NON-GLARE AND CONTRASTING ON COLOR.

SHATARA
ARCHITECTURE INC.

890 7TH ST.
SAN FRANCISCO
CA 94107

TEL (415) 512-7566
suheil@shataraarch.com

DRAWINGS AND SPECIFICATIONS, AS INSTRUMENTS OF PROFESSIONAL SERVICE, ARE AND SHALL REMAIN THE PROPERTY OF THE ARCHITECT.

THESE DOCUMENTS ARE NOT TO BE USED, IN WHOLE OR IN PART, FOR ANY PROJECTS OR PURPOSES WHATSOEVER, WITHOUT THE PRIOR SPECIFIC WRITTEN AUTHORIZATION OF SHATARA ARCHITECTURE INC.

PROJECT
TENANT IMPROVEMENT

ADDRESS
6540 MISSION STREET
DALY CITY, CA

APN: 003131170

PROJECT DIRECTORY

ARCHITECT
SHATARA ARCHITECTURE INC.

890 7TH STREET
SAN FRANCISCO, CA 94107
TEL: 415-512-7566
CONTACT: SUHEIL SHATARA

BUILDING	07-26-2021
BUILDING	09-16-2021
BUILDING	12-10-2021
PLANNING	03-08-2022

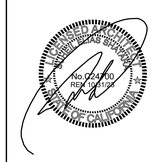

SHEET DESCRIPTION
ACCESSIBILITY REQUIREMENTS

A0.2

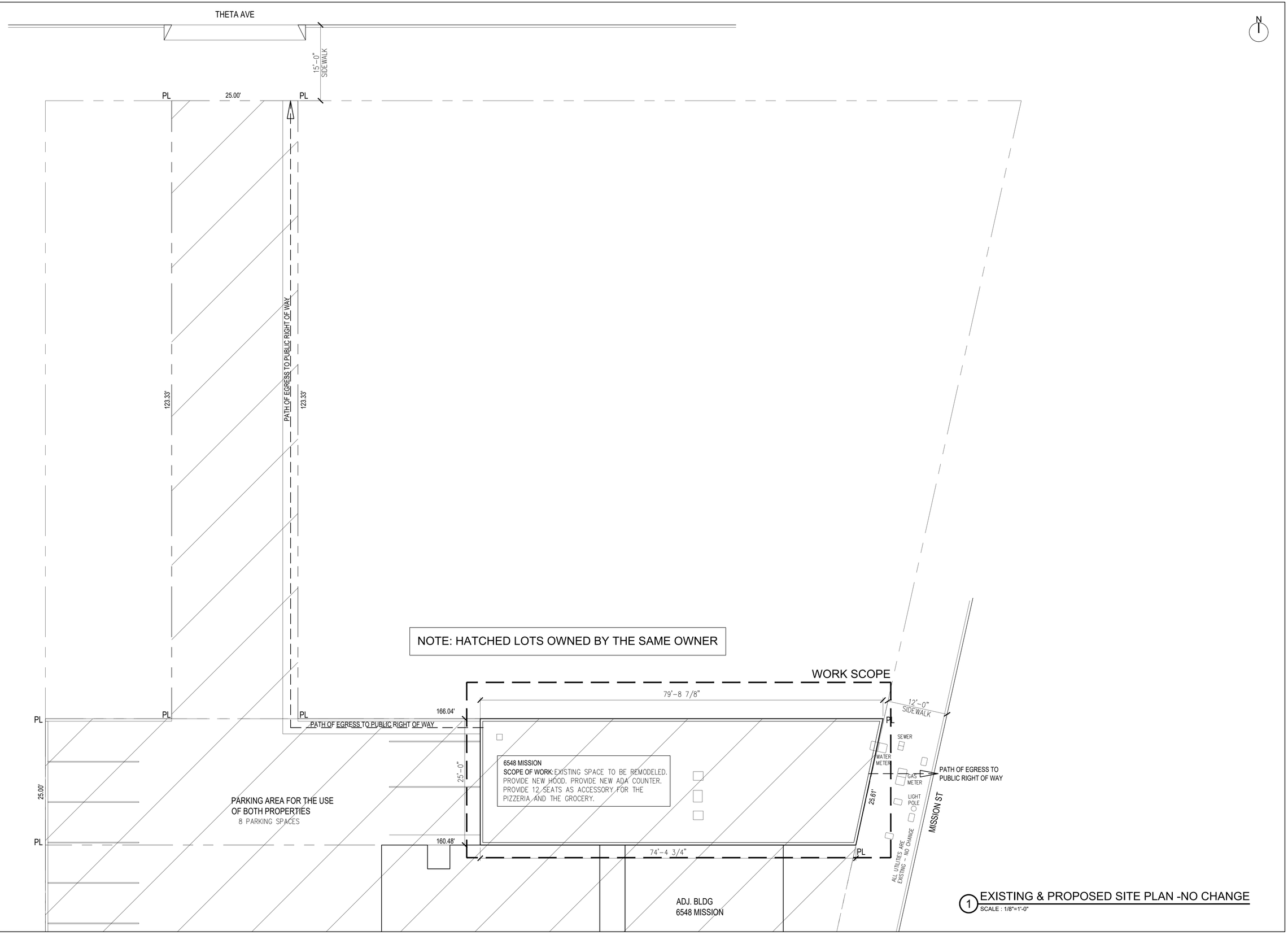

1 EXISTING & PROPOSED SITE PLAN -NO CHANGE
SCALE : 1/8"=1'-0"

SHATARA
ARCHITECTURE INC.

890 7TH ST.
SAN FRANCISCO
CA 94107

TEL (415) 512-7566
suheil@shataraarch.com

DRAWINGS AND SPECIFICATIONS, AS INSTRUMENTS OF PROFESSIONAL SERVICE, ARE AND SHALL REMAIN THE PROPERTY OF THE ARCHITECT.

THESE DOCUMENTS ARE NOT TO BE USED, IN WHOLE OR IN PART, FOR ANY PROJECTS OR PURPOSES WHATSOEVER, WITHOUT THE PRIOR SPECIFIC WRITTEN AUTHORIZATION OF SHATARA ARCHITECTURE INC.

PROJECT
TENANT IMPROVEMENT

ADDRESS
6540 MISSION STREET
DALY CITY, CA

APN: 003131170

PROJECT DIRECTORY

ARCHITECT
SHATARA ARCHITECTURE INC.

890 7TH STREET
SAN FRANCISCO, CA 94107
TEL: 415-512-7566
CONTACT: SUHEIL SHATARA

BUILDING	07-26-2021
BUILDING	09-16-2021
BUILDING	12-10-2021
PLANNING	03-08-2022

SHEET DESCRIPTION
EXISTING / PROPOSED SITE PLANS

A1.0

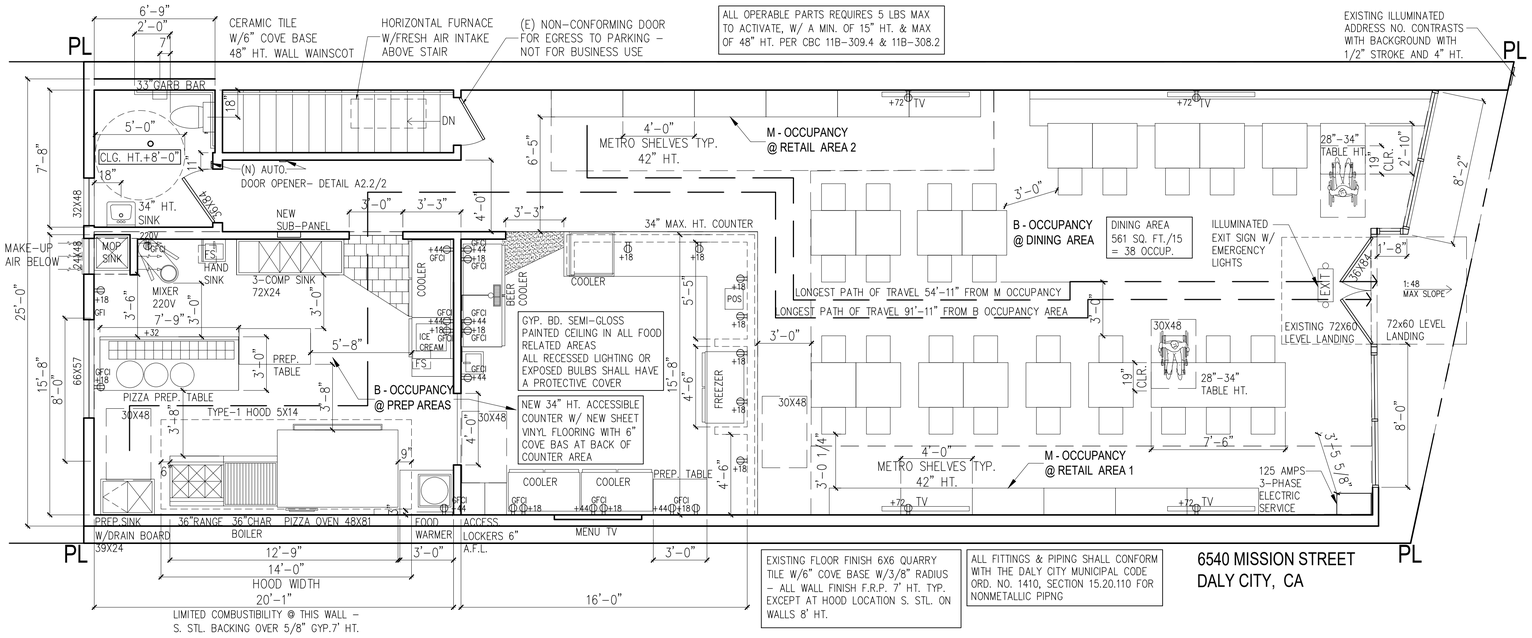

2 PROPOSED FIRST FLOOR PLAN

SCALE : 1/4"=1'-0"

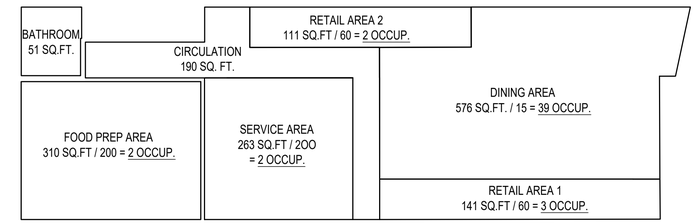

TOTAL LOAD: 49 OCCUPANTS

OCCUPANCY LOAD (PER CBC 1004.5)

FLOOR	SPACE	AREA	LOAD	OCCUP.
		600 SQ.FT.	15 SQ.FT	40
FIRST FLOOR –	DINING AREA	576 SQ.FT.	15 SQ.FT	39
	RETAIL AREA 1	156 SQ.FT.	60 SQ.FT	3
	RETAIL AREA 2	111 SQ.FT.	60 SQ.FT	2
	CIRCULATION	190 SQ.FT.	–	0
	SERVICE AREA	263 SQ.FT	200 SQ.FT	2
	FOOD PREP AREA	310 SQ.FT.	200 SQ.FT.	2
	ADA BATHROOM	51 SQ.FT.	–	0

TOTAL OCCUPANCY LOAD = 49

EXITING REQUIREMENTS

SPACE	OCCUP. TYPE	TRAVEL DISTANCE
RETAIL AREA	M	250 FT.
DINING, SERVICE, FOOD PREP	B	300 FT.

AREA OF WORK IS FULLY SPRINKLERED.

3 OCCUPANT LOAD CALCULATION

SCALE : 1/8"=1'-0"

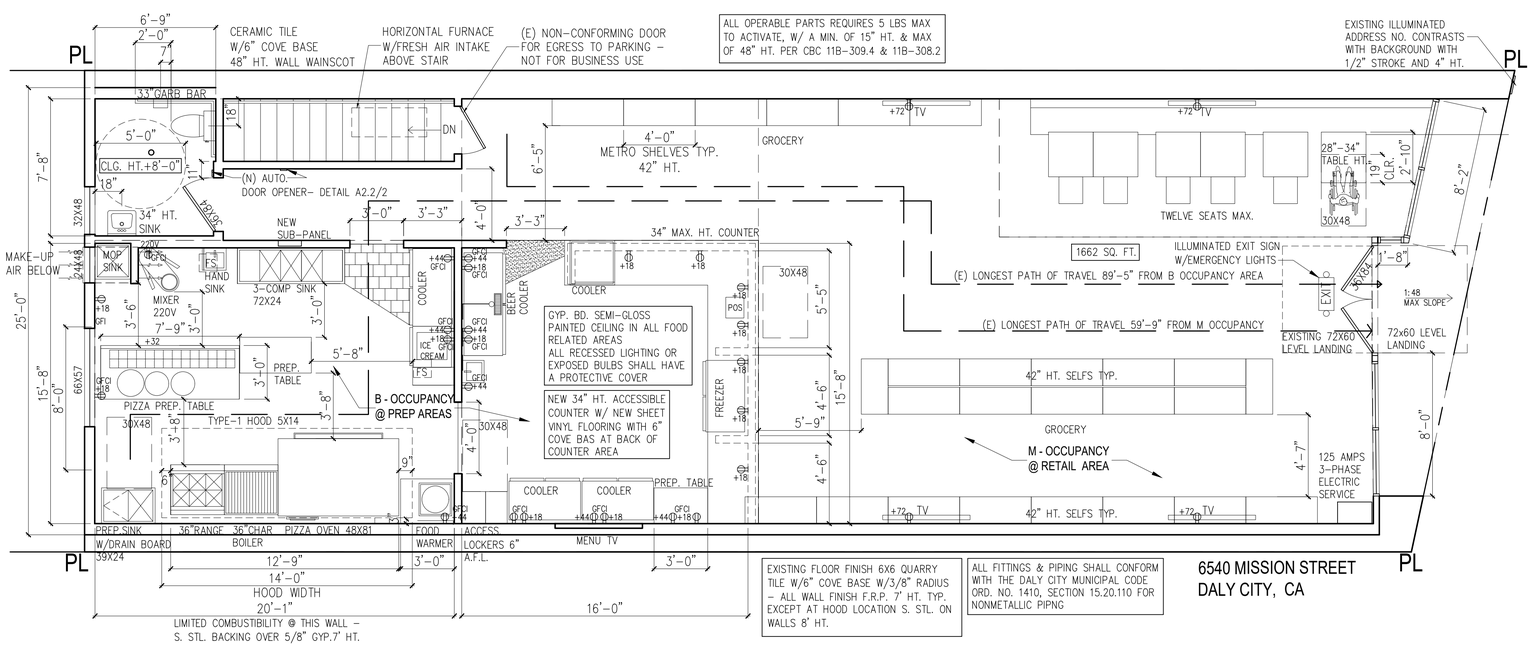

1 AS-APPROVED FIRST FLOOR PLAN

SCALE : 1/4"=1'-0"

DETAILS SHEET NOTES

1. WALL TYPES DWGS DO NOT CONVEY STRUCTURAL (SHEAR) REQUIREMENTS. SEE STRUCT. DWGS.
2. FLOOR CEILING ASSEMBLIES DO NOT CONVEY STRUCTURAL REQUIREMENTS. SEE STRUCT. DWGS.

SHEET NOTES

1. ALL PLAN DIMENSIONS TO FACE OF ROUGH FRAMING, FACE OF CONCRETE, OR CENTER LINE OF STEEL, U.O.N.
2. ALL SECTION AND ELEVATION DIMENSIONS TO FINISH FLOOR.
3. ALL WOOD FRAMED EXTERIOR WALLS TO BE FRAMED WITH 2X6 U.O.N. INTERIOR WALLS TO BE FRAMED WITH 2X4 U.O.N. REFER TO WALL TYPES TAGS FOR EXCEPTIONS.

LEGEND

WALL TYPE
SECTION
DOOR NUMBER
ELEVATION
WINDOW NUMBER
FLOOR/CEILING ASSEMB. TYPE
(E) WALL TO BE DEMOLISHED
1 HR FIRE RATED WALL
(E) WALL TO REMAIN
2 HR FIRE RATED WALL
(N) WALL
PROPERTY LINE

SHATARA ARCHITECTURE INC.

890 7TH ST.
SAN FRANCISCO
CA 94107

TEL (415) 512-7566
suheil@shataraarch.com

DRAWINGS AND SPECIFICATIONS, AS INSTRUMENTS OF PROFESSIONAL SERVICE, ARE AND SHALL REMAIN THE PROPERTY OF THE ARCHITECT.

THESE DOCUMENTS ARE NOT TO BE USED, IN WHOLE OR IN PART, FOR ANY PROJECTS OR PURPOSES WHATSOEVER, WITHOUT THE PRIOR SPECIFIC WRITTEN AUTHORIZATION OF SHATARA ARCHITECTURE INC.

PROJECT
TENANT IMPROVEMENT

ADDRESS
6540 MISSION STREET
DALY CITY, CA

APN: 003131170

PROJECT DIRECTORY

ARCHITECT
SHATARA ARCHITECTURE INC.

890 7TH STREET
SAN FRANCISCO, CA 94107
TEL: 415-512-7566
CONTACT: SUHEIL SHATARA

BUILDING	07-26-2021
BUILDING	09-16-2021
BUILDING	12-10-2021
PLANNING	03-08-2022

SHEET DESCRIPTION
AS-APPROVED AND PROPOSED PLAN

A2.0

Daly City Planning Commission
Agenda Report

333 - 90th Street ◆Daly City ◆ California ◆ 94015 ◆ 650-991-8033

Meeting Date:	October 4, 2022
Application:	Zone Change ZC-09-21-015237 (Amendment to a Portion of Planned Development Zone #47)
Project Planner:	Michael Van Lonkhuysen, Planning Manager
Project Location:	950 – 980 King Drive (APN 091-175-220)
Project Description:	Amendment to the Parking Plan and Delivery Times for Manila Market
Applicant/Property Owner:	Tammy Ho 1534 Plaza Lane, Suite 326 Burlingame, CA 94010
Environmental Assessment:	Exempt from CEQA per CEQA Guidelines Section 15061(b)(3) – Review for Exemption
Applicable Daly City Municipal Code Sections:	Chapter 17.28 – PD Planned Development District Chapter 17.34 – Off-Street Parking and Loading

Site Information

Property Size	Existing Use	Proposed Use	General Plan Designation	Current Zoning
4.88 acres	Shopping Center	Shopping Center	Neighborhood Commercial	Planned Development (PD-47)

Area Information

Land Use	Zoning
North: Abandoned gas station/commercial	C-1/South San Francisco
South: Single-Family Homes	R-1 Single-Family Residential
West: Single-Family homes/Some Commercial	R-1 Single-Family Residential/C-1
East: Single-Family Homes	R-1 Single-Family Residential/R-2

Background

The applicant and owner of the King Plaza Shopping Center, Tammy Ho, is proposing to amend the text of Planned Development Zone 47 (PD-47) that contains the King Plaza Shopping Center (see Attachment A – Location Map). The proposal would effectively create an amended Planned Development zone for the King Plaza Shopping Center, i.e., Planned Development Zone 47A, and retain the Planned Development 47 text as it presently exists for the parcel containing Classic Bowling Center, which also exists in PD-47.

King Plaza Shopping Center was constructed in 1973. Classic Bowling Center was constructed on the same parcel 5.7-acre parcel in 1985. At the time, both were owned by a single property owner, DBP Investments and King Plaza Partners. In 1991, the property was rezoned from C-1 Light Commercial to PD-47, allowing construction of a small retail building on the presently-vacant parcel at the intersection of King Drive and Callan Boulevard, where a gasoline station previously existed. In 1997, the City Council approved an amendment to Planned Development 47 and approved Minor Subdivision MS97-1, creating a separate parcel for the bowling alley and some of the parking spaces serving it. In 2007, the King Plaza Shopping Center was sold to the applicant, while DBP investments continued ownership of the parcel containing Classic Bowling Center.

The amendments to the Planned Development zoning proposed by the applicant are summarized as follows and are shown in red-strike-out and underline in an attachment to this staff report (see Attachment B – Proposed Amendments to PD-47 Text):

1. Allowance of operable and inoperable vehicles to be parked on the site for more than 24 hours if permitted by the proposed Parking Management Plan.

2. Amendment to clarify that the Planning Division's review pertains solely to compliance with the Parking Management Plan.

3. Clarification that "trucks" subject to delivery restrictions are those with six-axels or more. Semi-trucks with five axels, for example, would be excluded from the regulation. For clarity, staff has attached a graphic that depicts federal standards related to axel quantity and length for standard freight delivery trucks (Attachment C – Truck Axel Diagram and Weight Limits).

4. Amendment to the delivery hours of trucks with more than six-axels to be between 7:00 A.M and 1:00 P.M., seven days per week, with the provision for "occasional" deliveries after 1:00 P.M. Monday through Friday. The proposed amendment would allow the Planning Division to approve changes to the delivery hours, although the manner of doing so is unspecified.

5. Amendment to exclude the 62 parking spaces provided on the vacant lot located at the Callan Boulevard/King Drive intersection from required parking, effectively requiring that all 302 parking spaces be provided on the balance of the shopping center and bowling alley parcels.

6. Removal of the requirement for a monument sign at the corner of Callan Boulevard and King Drive.

7. Removal of the requirement that the King Plaza Shopping Center property and Classic Bowl property share a common set of CC and Rs related to the maintenance of each property (garbage disposal, litter removal, etc.).

8. Removal of the maximum square feet allowed on the King Plaza Shopping Center as approved by the City.

In addition to the Planned Development text amendments proposed, Janet Fogarty, the attorney representing the applicant, has requested that the Planning Commission and City Council act on the parking management plan "together with the requisite Declaration of Covenants, Conditions and Restrictions ("CC and Rs")" developed by the applicant (see Attachment D – Letter from Law Offices of Janet Fogarty). The Planning Commission should be aware that letters from the attorneys representing Classic Bowling Center and the owners of Classic Bowling Center have also provided correspondence to the Planning Commission (see Attachment E – Letters from Mark Hudak and Steve DeVincenzi).

Zone Text Amendments

The applicant has proposed amending the text of existing Planned Development Zone 47 and has provided a strike out and underline of the specific ways she requests the text be amended. The Planning Division has provided a summary of each requested change and recommended action for each in underline:

Vehicles parked more than 24 hours. This amendment to the text would allow parking of operable or inoperable vehicles for more than 24 hours on Parcels A and A1 (shopping center parcels) if permitted by the proposed Parking Management Plan (PMP). The proposed PMP provides no such allowances aside from a sole delivery truck associated with Manila Market and therefore staff takes no issue with this amendment. Amendments to the PMP requested for Planning Division approval that request parking any vehicles for more than 24 hours aside from the Manila Market truck will likely not be approved to ensure parking space turnover. The Division has no intention of ever approving inoperable vehicle storage, as doing so could constitute a violation of the Daly City Manipal Code Section 8.16.030.

Lease review pertaining solely to PMP compliance. The amendment would clarify that the Planning Division's review of individual leases within the shopping center pertains solely to compliance with the Parking Management Plan. Staff has no issue with this amendment but recommends that the center owner supply the Planning Division with a standard lease agreement instead of submitting every lease to the Division for review. All leases shall specifically require that all business owners and employees shall park in the 62-space parking lot at the northeast corner of Callan Bouvard and King Drive, and shall not park in any other location until this lot is full.

Clarification of what is a "truck". This amendment clarifies that the restriction to "trucks" would only apply to those trucks with six axles or more, which are essentially larger tractor trailer trucks.

Staff has observed site operations, including on the smaller parcel adjacent to the intersection of Callan Boulevard/King Drive, and has not seen a truck with more than six axles ever present on the site. Therefore, it appears the applicant is attempting to remove the hour restriction that currently applies to truck deliveries on the site. Staff recommends that this amendment be rejected entirely.

Delivery hour amendment. The applicant has proposed amending truck delivery hours to be between 7:00 A.M and 1:00 P.M., seven days per week, with the provision for "occasional" deliveries after 1:00 P.M. Monday through Friday. The proposed amendment would allow the "Planning Department" to approve changes to the delivery hours, although the manner of doing so is unspecified. The current restriction is 8:00 A.M. to 7:00 P.M. seven days per week.

In consideration of this request, staff has observed field conditions at the shopping center and although staff has no issues with this amendment in concept, the permissible presence of any delivery vehicles on the shopping center property is recommended to be as follows:

1. Deliveries by *any vehicle including passenger cars* that *do not* occupy and block ingress or egress to any of the shopping center's required parking spaces as identified in the Parking Management Plan may occur at any time.

2. Deliveries by *any vehicle including passenger cars* that *do* occupy any of the shopping center's required parking spaces as identified in the Parking Management Plan may occur between 7:00 A.M and 1:00 P.M., seven days per week. However, these deliveries shall occur in the upper corner lot and shall not block ingress or egress to any parking space, nor shall any such vehicle block an access lane required by the Daly City Fire Department.

3. The applicant shall clearly stripe areas for truck parking during allowable delivery hours in a location and manner acceptable to the Planning Division. The striping shall be in a size and color legible to motorists entering and parking on the property, and shall clearly indicate that delivery parking is permissible within said zone between 7:00 A.M and 1:00 P.M, seven days per week. None of the striping shall enter the driveway dimension specified by the Zoning Ordinance.

With the amendments outlined above, staff recommends approval of the proposed delivery hours.

Exclusion of Callan/King Drive spaces from required parking. The applicant has proposed excluding the 62 parking spaces provided on the vacant lot located at Callan Boulevard/King Drive intersection from required parking, effectively requiring all 302 parking spaces be provided on the balance of the shopping center and bowling alley sites. Including parking at the Classic Bowling Center, the entire block (not including in-street parking spaces) on which the shopping center and bowling alley are situated provides 326 spaces. Since there is no physical space for the 62 parking spaces at the Callan Boulevard/King Drive to be replaced elsewhere on the block, it would be necessary for the PD-42 amendment to include a reduction in required parking from 302 spaces to 240 spaces, an amendment that would be unjustified given the lack of parking that already exists. Staff recommends that this amendment be rejected entirely.

Monument sign requirement removal. Staff believes that this requirement could have been related to community-entry sign which has since been installed at King Drive and Skyline Drive. It therefore appears that the sign was intended to be a public purpose sign and that installation could have been intended to be within the public right-of-way. Given limited public right-of-way at the property frontage and the community-entry sign that already exists at the King Drive and Skyline Drive intersection, staff has no issue with this amendment.

Common CC and Rs related to maintenance. Removal of the requirement that the King Plaza Shopping Center property and Classic Bowl property share a common set of CC and Rs related to the maintenance of each property (garbage disposal, litter removal, etc.). Staff has no issue with this amendment provided there is no misunderstanding that the amendment *only* relates to the maintenance responsibilities specified in the PD-47 zone language. Common CC and Rs will remain a requirement for the Parking Management Plan and staff reiterates that the PD-47 zone language for the Classic Bowling Center would remain unchanged if the requested Zone Change is approved.

Maximum square feet in shopping center. This amendment proposes the removal of the maximum square feet allowed on the King Plaza Shopping Center as approved by the City. The amendment is unnecessary and could be viewed as tacit approval to adding square feet at the shopping center. Staff recommends that this amendment be rejected entirely.

Parking Management Plan (PMP)

Parking in and around the King Plaza Shopping Center has been a long-standing issue with shopping center and bowling alley property owners, City staff, and Daly City residents who live near the center. In 1983, when the City Council approved the bowling alley, the City staff granted an "administrative parking variance" that allowed the center to provide 80 percent of the parking that would have normally been required for the shopping center and bowling alley as combined uses operating simultaneously. The shopping center and bowling alley, which together would have been required to provide 410 parking spaces according to previous calculations by City staff, now provide 326 spaces, including 62 spaces on the vacant parcel at the intersection of Callan Boulevard and King Drive.

Over the years, center occupancy has grown to include significantly more restaurant space than was likely contemplated at the time the parking variance was approved. Zoning Ordinance parking requirements for restaurants are more than half that required for regular retail and service uses, and observational studies conducted by the Institute of Transportation Engineers (ITE) support the Ordinance's requirements. As a result of inadequate parking, neighboring residents, as a part of the 1997 hearing process to approve the minor subdivision that created the bowling alley parcel (Minor Subdivision MS97-1), expressed concerns about the general lack of parking and enforcement of disabled parking at the center.

To address concerns about parking, the City Council, upon approving Minor Subdivision MS97-1, also adopted revisions to PD-47 that included strengthening the provisions of a Parking Management Plan that had been required as part of the formation of PD-47 in 1991. These revisions had also sought to limit more intensive retail uses in the shopping center, but it is unclear whether the land use limitations were ever adopted.

Since the approval of Minor Subdivision MS97-1 and revisions to PD-47 related to it, it does not appear that the efforts embodied in the PD revisions have been implemented, most notably the requirement that the shopping center operate under an approved Parking Management Plan and that the plan be incorporated into recorded CC and R's and enforced though shopping center leases, also reviewed by the Planning Division. As referenced in the materials submitted to the Planning Commission by attorneys representing King Plaza Shopping Center and Classic Bowl, the two parties are now involved in litigation and mediation to solve, among other things, the issue of limited parking at peak times on the shopping center property.

To bring the property into better conformity with the PD-47 zoning, the applicant has submitted a Parking Management Plan to the City for approval, as required by the PD-47 zone text (see Attachment F – Draft Parking Management Plan). The PD-47 text appears to require City Council approval of the initial Parking Management Plan with amendment to the Plan authorized to Planning Division staff.

The Draft Parking Management Plan contains a text component and a graphic component that delineates time restrictions for all parking spaces on both the King Plaza Shopping Center and Classic Bowling Center properties. Because Classic Bowling Center is not a party to the application, the proposed time restrictions on the Center's parcel are thereby omitted from the proposal. The Plan includes parking spaces on the former service station site at the Callan Boulevard and King Drive intersection. The text component references this area as the "upper corner lot."

The graphic component generally organizes the proposed parking limits as shown on the next page. According to the proposal, approximately half the spaces would be time-restricted of durations generally between one and two hours (there are three parallel spaces that would be restricted to 20 minutes in front of Ling Nam/Star Bread). Most spaces would have no time limit. None of the spaces are in the public right of way, which provides roughly 32 spaces in Shipley Avenue, eight spaces in King Drive, 20 spaces in Callan Boulevard, and 16 spaces in Warwick Street, for a total of 76 public parking spaces in adjacent street that do not appear to be time restricted aside from street cleaning on Thursdays.

As outlined in the Draft Parking Management Plan text, the proposed hour limitations would apply seven days per week and be enforced by a towing program. It is not clear how automobiles would be monitored for time compliance once they arrive at the shopping center. According to the draft plan, the applicant proposes that nine spaces be reserved for loading and unloading in the upper corner lot and that Manila Market be allowed to park a delivery truck continually in this lot. The draft plan also requires that the owners of the Classic Bowling Center notify the King Plaza Shopping Center owner if the bowling center is to host a "large scale evening event" and that the shopping center owner may require the bowling center "provide, at the expense of said business, for valet, or require bus, vanpool, or carpool arrangements for their customers." The draft plan furthermore stipulates that all shopping center tenants must require that employees park in the upper corner lot or in the public street.

King Plaza Shopping Center - Draft Parking Management Program

Zone	Proposed Restriction	Number of Spaces	%	General Description
ADA	No Limit	8	2%	Accessible parking spaces In various Locations
A, B, and C	One-Hour Limit	54	17%	Parking immediately adjacent to shopping center store fronts and Manila Market
D	Two-Hour Limit	93	29%	Parking field north of Manila Market near Warwick Street
E	No Limit	159	49%	Parking field between "L" Building and Classic Bowling Center, spaces immediately adjacent to Classic Bowling Center west entrance and on Classic Bowling Center property, and the majority (51 of 62) spaces on upper corner lot
F	20 Minute Limi	3	1%	Parallel spaces adjacent to Ling Nam/Star Bread - 980 King Dr.
"Loading Zone"	No Limit	9	3%	Area designated "Loading Zone" in upper corner lot
	Total	**326**	**100%**	

In consideration of the Draft Parking Management Plan proposed by the applicant, staff has analyzed the applicant's proposal and has visited the site numerous times during varying hours of the weekday and weekend, and makes the following observations:

1. The Draft Parking Management Plan proposed by the applicant provides that more than half the parking spaces on the shopping center property would remain unrestricted as to time and that 80 percent of spaces would either have no time limit or would be limited to two hours.

2. All the parking spaces immediately surrounding the Classic Bowling Center property line, including 32 spaces in Shipley Avenue and eight spaces in King Drive, are not proposed for time restriction.

3. Most of the persons patronizing restaurants and businesses at King Plaza Shopping Center, including Manila Market, and the Classic Bowling Center, are present for less than two hours, representing an acceptable turnover of parking spaces. There are a limited number of automobiles that are stationary on the shopping center's main lots for longer than one hour and longer than two-hours.

4. The upper corner lot is underutilized and often nearly vacant, in the morning hours especially. In the morning the lot is occupied by larger delivery vehicles, which are sometime numerous (three to five) in quantity.

5. Based on the preceding two observations, staff believes that employees of both the shopping center and bowling center are not using upper corner parking lot because they

have not been directed to do so. Employee parking is therefore occurring on the shopping center site or in the adjacent streets.

6. Street parking surrounding the shopping center remains fairly abundant during morning and early afternoon, but becomes scarcer in the late afternoon, evening, and weekend.

Staff feels that the concept of parking space time limits is a reasonable exercise of the City's police power given the circumstances that surround the subject property (parking reduction) and historical impact of the shopping center and bowling alley to neighborhood residents of Daly City. The parking reduction granted to allow the bowling alley construction could not have contemplated the proliferation of uses that exist at King Plaza Shopping Center today, nor the attractiveness of Classic Bowling Center as a semi-regional destination for bowlers. Furthermore, staff feels that King Plaza Shopping Center and Classic Bowling Center operate in symbiosis, with the center's tenants patronizing the bowling center and vice versa. For these reasons, staff recommends that the Planning Commission forward to the City Council a recommendation of approval of the Parking Management Plan with the following exceptions:

1. All shopping center leases entered and renewed after the adoption of the PD-47 amendments shall stipulate that all employees of the business subject to the lease will be informed that their employees are to park in the upper corner lot adjacent to Callan Boulevard and King Drive. Only if this lot is full shall employees use the public right-of-way for parking. Employees not adhering to this requirement shall be a party to a lease violation.

2. None of the time restrictions identified in the Parking Management Plan shall apply after 7:00 P.M., the time Manila Market currently closes seven days per week. Should the market's closure hours be amended to occur prior to or expand past 7:00 P.M., and the new closure hour is to occur seven days per week, the shopping center owner shall be authorized to change the time restriction to end at that new closure hour. Staff recommends that gates be installed at the driveway entrances in coordination with the Daly City Fire Department to prevent overnight parking at the center by non-patrons.

3. The paragraph in the Draft Parking Management Plan concerning "Large Scale Evening Event" shall be stricken completely. Staff feels that the time restrictions set forth in the Parking Management Plan should be sufficient to address large-scale events. Furthermore, the enforceability of the provision as written appears infeasible and would ideally and ultimately lie with the City of Daly City, which has limited resources to conduct field observations to ascertain compliance. Valet parking on the site would need to block fire access lanes and would not be permitted.

4. The following text shall be added to the Draft Parking Management Plan: "The Declarant shall install and maintain striping in areas for truck parking during allowable delivery hours in a location and manner acceptable to the Planning Division. The striping shall be in a size and color legible to motorists entering and parking on the property, and shall clearly indicate that delivery parking is permissible within said zone between 7:00 A.M and 1:00 P.M, seven days per week. None of the striping shall enter the driveway dimension required by the Daly City Zoning Ordinance."

Declaration of Covenants, Conditions and Restrictions (CC and R's)

As indicated in the correspondence from Janet Fogarty, the applicant is requesting that the Planning Commission consider and approve CC and R's ostensibly related to both the shopping center and bowling alley parcels (see Attachment G – Draft CC and R's). Regarding this request, the Planning Division is not requesting the Planning Commission act on or recommend that the City Council act on this document, simply because the Planning Commission is authorized by State law to act solely on land use matters. e.g., the proposed zone text amendment, use permits, etc. The CC and R's, while referenced from time to time, in for example Conditions of Approval, are not within the jurisdiction of the Planning Commission. While the applicant request is specifically related to the parking management plan, which is more closely related to the Planning Commission jurisdiction, staff is recommending the Planning Commission disregard the request for approval of the CC and R's and instead adhere to the normal review and approval procedure for CC and R's, which is through the City Attorney's office.

General Plan and Zoning Consistency

The General Plan designation for the project site is C-N (Neighborhood Commercial). The proposed amendments are consistent with the operation of a retail shopping center and are therefore consistent with the existing General Plan designation.

Environmental Assessment

Staff has found the proposed text amendments are exempt from the California Environmental Quality Act (CEQA) per CEQA Guidelines Section 15061(b)(3) – Review for Exemption. Staff does not believe the proposed amendments have any possibility to have an impact to the environment as the amendments relate primary to truck delivery hours.

STAFF RECOMMENDATION

Staff recommends that the Planning Commission take the following actions:

1. Adopt the Findings as outlined herein;

2. Find that the proposal is exempt from the California Environmental Quality Act (CEQA) pursuant to CEQA Guidelines Section 15061(b)(3) – Review for Exemption; and

3. Recommend that the City Council approve Zone Change ZC-09-21-015237.

Staff is available to provide any additional information desired by the Planning Commissioners.

Respectfully submitted,

Michael Van Lonkhuysen
Planning Manager

Tatum Mothershead
Director of Economic and Community Development

Attachments
Attachment A – Location Map
Attachment B – Proposed Amendments to PD-47 Text
Attachment C – Truck Axel Diagram and Weight Limits
Attachment D – Letter from Law Offices of Janet Fogarty
Attachment E – Letters from Mark Hudak and Steve DeVincenzi
Attachment F – Draft Parking Management Plan
Attachment G – Draft CC and R's

SITE LOCATION – BLUE AREA ONLY

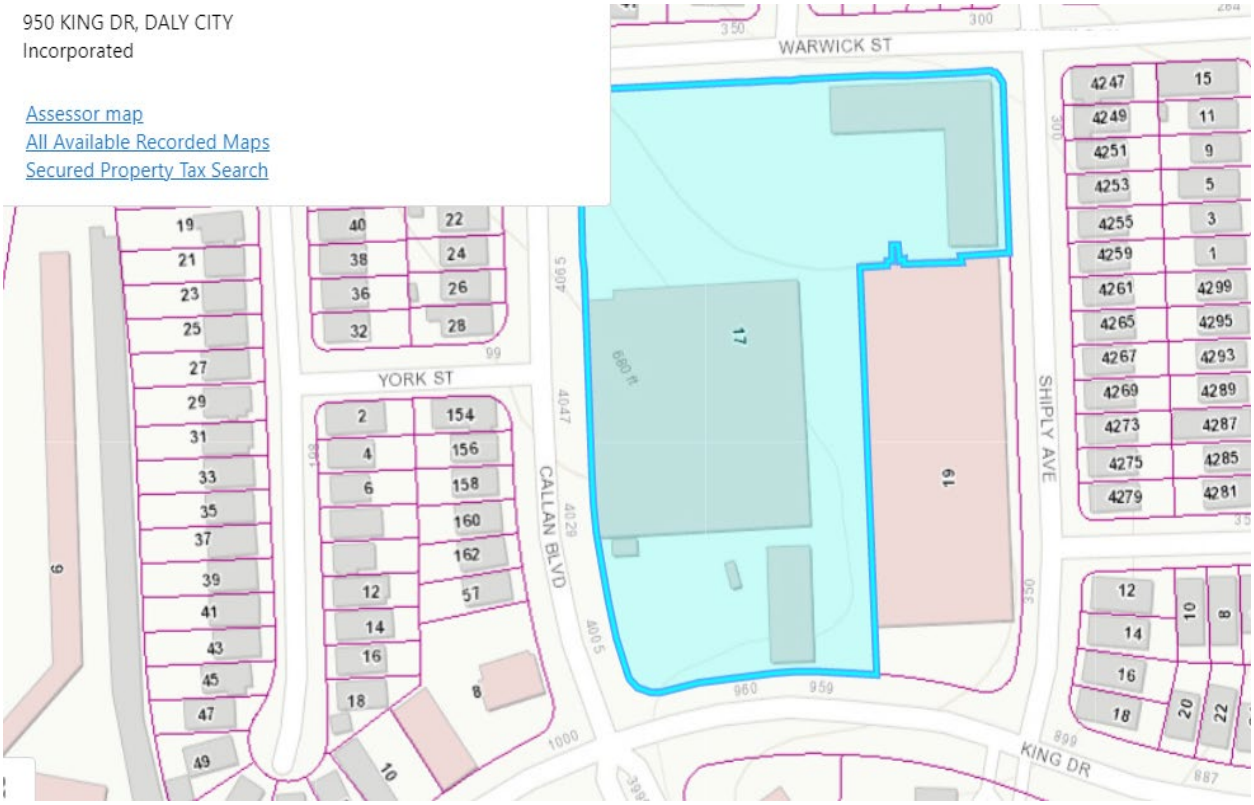

PLANNED DEVELOPMENT STANDARDS
PD-47: King Plaza Shopping center

The purpose and intent of these Planned Development Standards is to modify the previously established standards of the PD-47 zone at King Plaza.

I. PERMITTED USES

The Planned Development Standards for PD-47 have been divided into applicable standards for three separate parcels. Parcel "A" is comprised of all shopping center property not including the bowling center property. Parcel "A-1" will refer to the corner lot at Callan and King Drive specifically. Parcel "B" refers to the bowling center property (See Attachment A – Planned Development Parcels).

A. The following uses shall be permitted:

1. Parcels A, A-1 and B

Art Studio
Bakery (retail)
Bank
Barber or Beauty shop
Book or stationary store
Business office
Candy store
Clothing or Department store
Coffee shop (excluding restaurant-style coffee shop)
Drugstore
Retail electrical and household appliance sales and services
Florist
Gift shop
One grocery store
Hardware store
Ice cream store
Laundry or cleaning agency (retail)
Instruction studio (dance or martial arts)
Jewelry store
Liquor store
Medical/Dental clinic
Pet food store
Professional office
Photographic studio
Restaurant (excluding drive-through)
Shoe repair
Sporting goods

Tailor shop
Trade or business school
Toy Store
Travel agent
Variety store
Video rental

B. The following uses shall be permitted with a Use Permit in the PD-47 zone:

1. Parcels A, A-1 and B

Accessory buildings or use
Animal kennel
Bar or Cocktail lounge
Bowling Alley
Garden supply
One health and fitness club (limited to 10,66 sq. ft. in the retail building on the west of the site, in the bowling alley building or on the corner lot at Callan and King Drive)
Motor vehicle parts supply
Outdoor sales
Pet shop
Businesses whose principal use is for the operation of amusement devices
Veterinary hospital or office

C. When a use it not specifically listed, it shall be assumed that when the unlisted use is similar to nor more objectionable than a permitted use, such use shall be permitted in the district to the same requirements of the most similarly listed use.

II. DEVELOPMENT STANDARDS

A. Parking and Circulation

1. Parcels A, A-1 and B

a. The property owners shall comply with and enforce a Parking Management Plan approved by the City. The Parking Management Plan shall be an appendix to and recorded as part of the Shopping Center CC&Rs. Changes to the Parking Management Plan shall be subject to approval by the Planning Division. The Parking Management Plan shall include the following:

b. No operable or inoperable vehicles shall be stored at the site for more than 24 hours. This requirement does not apply to Parcels A & A-1 if specifically permitted in the Parking Management Plan.

c. No vehicles or trailers shall be advertised for sale or rent on the site and no vehicle sales, leasing or rentals shall be conducted at the site.

d. Employee parking spaces shall be designated in the plan.

e. Measures to manage the parking during the evening peak hours. The plan may include such measures as valet parking, incentives to carpooling and disincentives to parking in the residential streets behind the center.

f. Lease documents of existing and future tenants shall incorporate compliance with the Parking Management Plan as a requirement of the lease. The general form of Lease documents shall be submitted to the Planning Division for approval to confirm the leases include a requirement for compliance with the Parking Management Plan.

g. A provision to allow shared parking for patrons of all uses in Parcel A, Parcel A-1 and B.

h. The precise plan shall show all required dimensions on back-up distance, fire access drives and parking stalls including compact and handicap spaces. The plan shall indicate how the compact spaces shall be marked on the site.

i. The shopping center management shall formulate and implement a program to control and lessen employee parking on the site. The Planning Division shall approve this program.

j. Applicant will post signs, impose conditions upon tenant, and make ~~every~~ best efforts to restrict truck deliveries (defined as trucks with 6 axles or more) to the supermarket ~~from parking in the customer parking lot by large semi-trucks, refrigerated trucks, or trucks larger than a four wheel delivery van~~ to be between the hours of ~~8~~7:00 a.m. and ~~7~~1:00 p.m. seven days per week~~. Small delivery vehicles may make such deliveries.~~ Occasional truck deliveries after 1:00 p.m. Monday through Friday shall not be construed as a violation of these standards. Any changes to delivery days or times shall require approval of the Planning Department. Notwithstanding the restrictions on delivery times for trucks set forth herein, such delivery time restrictions shall be suspended during a time of emergency as may be declared by any governmental agency having jurisdiction.

k. The total number of on-site parking spaces required for the King Plaza Shopping Center (Parcel A, Parcel A-1, and B) is 302, ~~not~~ including the corner lot at Callan and King Drive.

2. **Parcel A**

   a. The precise plan shall be configured to allow for wider parking spaces in front of the supermarket.

3. **Parcel A-1**

   a. The corner lot of Callan and King Drive shall be improved with resurfacing, restriping, and landscaping ~~and a monument sign~~.

   b. All parking spaces for new construction at the corner lot at Callan and King Drive must conform to regular size parking stall dimensions of the Zoning Ordinance. Total parking for new development on Parcel A-1 shall include the number of existing spaces in addition to spaces required by the Zoning Ordinance. All aisle widths must be at least 26 feet in width and turning radiuses must conform to minimum Fire Department and City Zoning Ordinance requirements.

   c. The parking lot shall conform to plans approved as part of the precise plans and shall be maintained in accordance with city standards.

B. Signage

1. **Parcels A, A-1 and B**

   a. A Master Sign Program shall be submitted and approved by a Design Review Committee. Changes to the Master Sign Program shall be submitted to the Design Review Committee for approval, except that minor changes can be approved administratively by the Planning Division.

   b. Wall sign and ground sign area, height and number shall comply with approved designs described in the adopted Master Sign Program. Existing tenant signs shall be allowed to remain and changes in copy shall not require compliance with the master sign program. However, other types of changes include relocation shall require that the new sign be in conformance with the program.

   c. Signs shall otherwise comply with the requirements of Section 17.32 Signs of the Daly City Zoning Ordinance, except as conditioned herein or as modified by the approved Master Sign Program.

C. Landscaping

1. **Parcels A, A-1 and B**

   a. Landscaping shall be installed in accordance with approved plans and maintained in a neat, clean and healthful condition.

D. Architecture/Site Design

1. **Parcels A, A-1 and B**

   a. Architectural design of all structures and facades, all materials and colors, and all landscaping all comply with plans approved by a Design Review Committee.

   b. Once approved, any major architectural modification shall be subject to approval by a Design Review Committee, except that minor changes may be approved administratively by the Planning Division.

   c. All roof equipment shall be screened from view from the surrounding streets.

   d. The Planning Division shall approve the design and location of all trash or storage enclosures and other proposed fencing or walls.

E. Maintenance

1. **Parcels A, A-1 and B**

   a. Each of ~~The~~the property owners shall prepare CC&Rs for review by the City Attorney, each as to their/its own parcels, as ~~which~~ to incorporation of~~e~~ the following standards:

   b. The shopping center shall be maintained in a neat, safe, and healthful condition.

   c. A garbage disposal plan approved by the Planning Division and the Streets Division shall specify that:

   d. All trash shall be confined in approved receptables and enclosures.

   e. All unenclosed materials, equipment and/or supplies of any kind shall be maintained within approved enclosure areas. Any stacked or stores items shall not exceed the height of the enclosure.

f. All trash and storage enclosures shall be properly maintained in accordance with approved plans.

g. The applicant shall prepare an agreement to implement a daily littler cleanup plan for all open areas, planters and public sidewalks adjacent to the shopping center. All waste materials generated by the market, such as cardboard boxes, skids, garbage, litter, etc., must be stores in the enclosure for disposal. No waste material shall be visible at anytime. The enclosure shall be designed to conceal the contents. The enclosure should be kept clean and free of odor at all times.

~~g.~~

F. Lighting

1. Parcels A, A-1 and B

a. All exterior lighting shall be in accordance with precise plans and shall be adequately maintained according to approved standards.

G. Building Area Limitation

1. Parcel A

a. There shall be no additional square footage allowed on Parcel A except as may be approved by the City of Daly City. ~~in the shopping center beyond the existing 57,890 square feet (excluding the bowling center property and the corner lot at Callan and King Drive).~~

H. Required Plans

1. Parcel A-1

a. Any proposed development on the corner lot at Callan and King Drive shall be by the amendment procedures of Daly City Municipal Code Section 17.28.010(I).

b. The precise plan for this planned development shall also identify:

1. Ingress/egress and easement rights for all public utilities, city water mains, sanitary sewer mains and other service facilities located across the proposed subdivision lines.

2. Location of all existing buildings and structures and their off-set distances from the proposed property lines.

I. Easements

1. Parcel B

a. A twenty-foot no-build easement shall be recorded around the bowling center building and reflected in the precise plan.

II. GENERAL

A. Parcels A, A-1 and B

1. All site improvements shall conform to plans approved as part of the Precise Plans. Any major site modifications shall require an amendment of the PD approval and shall be subject to approval by the Planning Commission and City Council except that the Planning division may approve minor changes.

2. Individual buildings shall not be sold separately, or if the sale of any building is anticipated, all requirements of the Subdivision Ordinance in effect at the time of the sale shall be complied with in full prior to such sales.

3. The property owners of the shopping center shall seek to provide a balanced mix of uses with compatible peak hours and parking needs.

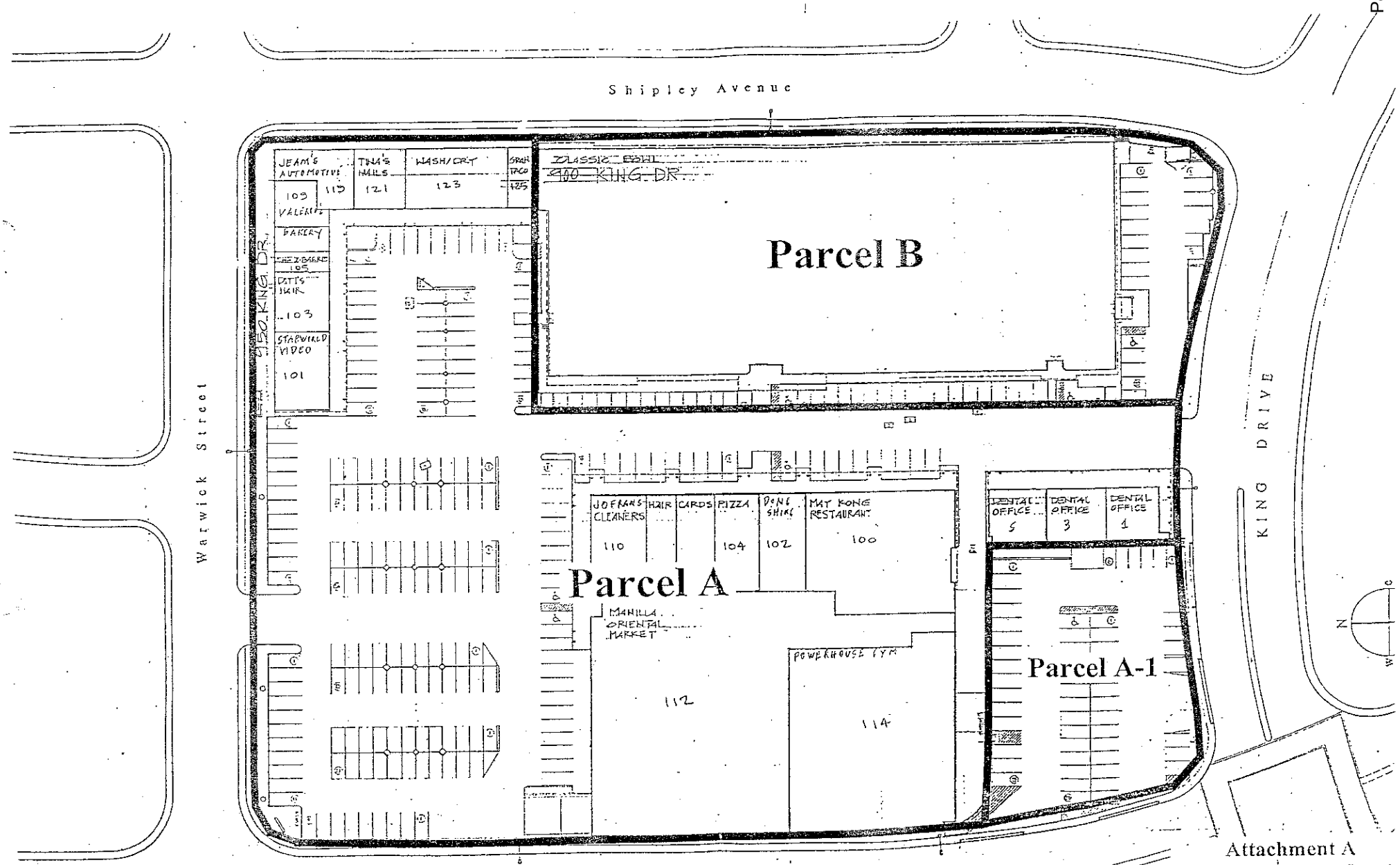

Attachment A
Planned Development Parcels

Vehicle or Combinations	Maximum Weight, Pounds	
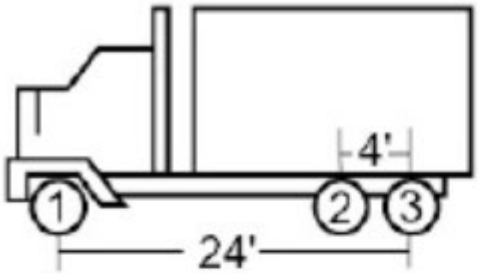	Axle **1**	20,000
	Axles 2,3	34,000
	Axles 1,2,3	54,000
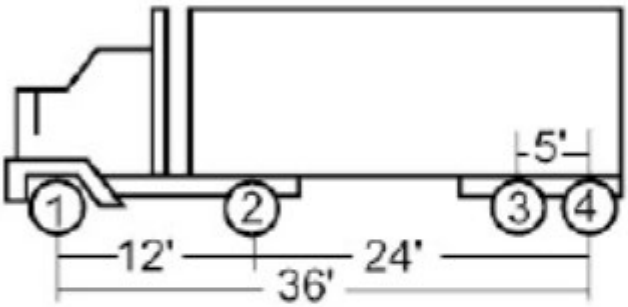	Axle **1**	20,000
	Axle 2	20,000
	Axles 3,4	34,000
	Axles 1,2	40,000
	Axles 2,3,4	54,000
	Axles 1,2,3,4	66,000
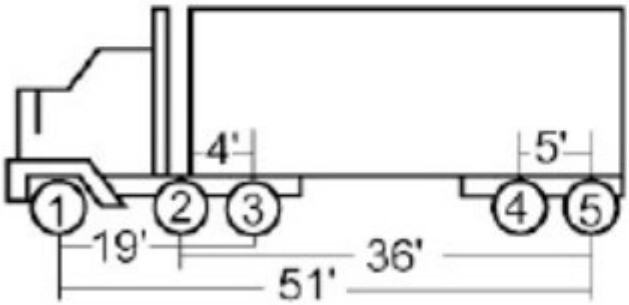	Axle **1**	20,000
	Axles 2,3	34,000
	Axles 4,5	34,000
	Axles 1,2,3	50,000
	Axles 2,3,4,5	68,000
	Axles 1,2,3,4,5	80,000
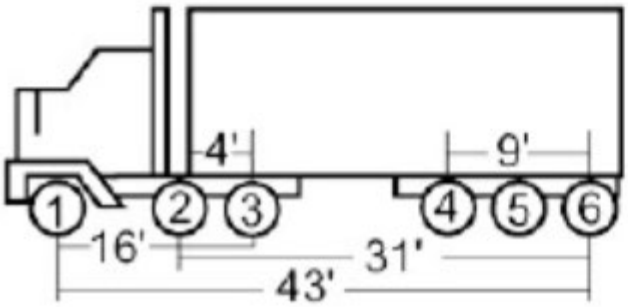	Axle **1**	20,000
	Axles 2,3	34,000
	Axles 4,5,6	42,500
	Axles 1,2,3	48,000
	Axles 2,3,4,5,6	67,500
	Axles 1,2,3,4,5,6	80,000

LAW OFFICE OF JANET FOGARTY
P.O. Box 1579
Millbrae, CA 94030
Telephone **650-652-5601** *Facsimile 650-652-5604*

jfogartylawfirm@yahoo.com

VIA ELECTRONIC MAIL

August 29, 2022

Planning Commissioners
Daly City Planning Commission
C/o Michael Van Lonkhuysen
City of Daly City

RE: King Plaza Center Application For Approval of Parking Plan, CC&Rs, and Zoning Text Amendment

Dear Commissioners:

This letter addresses an application for Planning Commission approval of two matters: 1) To approve a Parking Management Plan for King Plaza Center together with requisite Covenants, Conditions, and Restrictions ("CC&Rs"); 2) To amend the Delivery Times for Manila Oriental Market, which were incorporated as Conditions of Approval in the 1998 Zoning Ordinance described as PD-47. The applicant, King Plaza Center, LLC, is the owner of the King Plaza Shopping Center.

The applicant has submitted to the Planning Department a proposed Parking Plan for the King Plaza Center and proposed CC&Rs, from the owners, King Plaza Center, LLC. This Parking Plan covers the real property owned solely by King Plaza Center, LLC, but does not contain the property adjacent to that property owned by King Plaza Center. The property adjacent to King Plaza Center is owned by a partnership (DBP) and leased by them to Classic Bowl. DBP once owned the entire property with other partners but sold off the portion on which King Plaza Shopping Center is located several decades ago to an owner who since sold the King Plaza Center to the present owner. DBP and Classic Bowl assert that their business and invitees have an unfettered right to park at King Plaza Center pursuant to a purported easement. The "easement"

in question states on its face that it is effective only after recording it. The "easement" was never recorded, so King Plaza Center contends it was never effective, but even if it were, it does not give the right to DBP or Classic Bowl to allow their customers to use any and all parking spaces on the neighbor's property in King Plaza Center for as long as they like to the detriment of all the businesses that operate in King Plaza Center.

The Planning Commission and the City are not asked to render any decision about the dispute between DBP and Classic Bowl with King Plaza Center, however the Planning Commission and the City are asked to act on a submission of a Parking Plan with CC&Rs and Zoning Code Amendment which is intended to bring King Plaza Center into compliance with the City's Zoning Code.

King Plaza Center offers the Parking Plan with CC&Rs, and Zoning Code Amendment with the intent to make fair and equitable use of the King Plaza Center for all its users, and to ensure that the residential neighbors of this regional shopping center will be also treated in a fair and reasonable way so that employees and customers of the businesses in the center will not park in the surrounding residential areas.

Discussion

Item 1: Parking Plan and CC&Rs

When this shopping center was converted to a Planned Development, and the Classic Bowl building and use permit were approved, certain requirements were imposed. The applicant was told to submit Covenants, Conditions and Restrictions to govern maintenance and use of the shopping center parking lot and a parking management plan, both of which must be approved by the City before taking effect. There is no record of approval by the City of either CC&Rs or a parking management plan. According to the Ordinance cited as PD-47, Development Standards A, Parking and Circulation, the property owners are to comply with and enforce a Parking Management Plan, with certain designated standards, which Plan is subject to the approval by the City. Therefore, King Plaza Center offers this Parking Management Plan and CC&Rs to bring King Plaza Center into compliance with this requirement.

In 1998 the City approved the Planned Development for King Plaza Center based upon assumptions about the number of spaces available, and based on the utilization of the on-street parking surrounding the Center as additional parking spaces to qualify for the count of available spaces. The City required that the owners re-stripe all of the adjacent on-street parking, changing the spaces to angled parking from parallel parking, in order to increase the number of spaces to 80 on-street spaces. The City also granted a 20% parking variance to Classic Bowl since it did not meet parking requirements at that time. This 20% parking variance has added to the parking

conflicts over time because the conditional use permit was granted to Classic Bowl for a 60 lane bowling alley without sufficient parking.

Over time conditions have changed. The Shopping Center and the Bowling Alley have become more successful. Other bowling alleys have closed and this Classic Bowl has become a regional draw where before it was a local neighborhood recreation center. The Manila Oriental Market, the anchor tenant for King Plaza Center, is an essential business because this Market provides Asian groceries to the surrounding residents. Now parking in the shopping center has become congested, and there are conflicts in the parking needs, especially on holidays and weekends when demand for the uses in the Center and at the Bowling Alley are greatest.

In order to provide sufficient shared parking for all uses at the site as provided in Ordinance 1255 at A.1.f., the parking plan needs to make intelligent use of available parking. After consultation with parking experts, the attached proposal makes use of time-tested means of encouraging turnover by means of time limited parking for some of the spaces, as is done elsewhere in Daly City, including on Daly City streets with commercial uses.

The details are spelled out in the CC&Rs and proposed Parking Management Plan. The Proposed Parking Management Plan proposes a mix of time limits that would accommodate all of the uses of the Shopping Center and the Bowling Alley, in a fair and equitable way, and which would be easily understood by the customers and by the employees. Employee parking would be accommodated in the upper lot on-site.

Item 2: Delivery Times For Manila Oriental Market

In the original PD-47 (in Ordinance 1255 adopted in 1998) Conditions of Approval Item 7C, Delivery Times for Manila Oriental Market were to be limited to **before 8 AM or after 7PM**, 7 days per week. Under protest from the then-owner of the shopping center, a City Council committee worked out a compromise as to the delivery times because the owner of Manila Market found them impossible to live with. Deliveries to this specialty Asian market come at times when employees are on site to take delivery and when delivery services are willing to make delivery of these specialty items. Requiring only late night deliveries requires large delivery trucks arriving and leaving this residential neighborhood after 11:00 PM, which would be bound to disturb the residential neighborhood that surrounds this neighborhood shopping center.

Upon concurrence by Planning staff with the Council committee the times for delivery were changed and the change was conveyed to the owner in a 1999 letter from the City Planner of Daly City, specifically to change the allowable times for delivery to Manila Market to allow deliveries from 7:00 AM to 11:00 AM in the mornings every day. In reliance on that letter from

Daly City, since 1999 deliveries to Manila Market have been made between the hours of 7:00 AM and 11:00 AM daily. Signage for these times were approved by the City Planner with a copy sent to City Council.

Notwithstanding this direction from the City Planner, and despite 20 years of complying with the direction in the 1999 letter from the City Planner, in 2017 the owners received a letter from the City Attorney declaring that this change in delivery times was in violation of the original conditions of approval, and threatened to turn the matter over to Code Enforcement if not changed back to the original conditions of approval.

Although the City Attorney had apparently decided not to enforce this perceived violation, and has since rescinded the letter, she has brought to the owner's attention that the Ordinance 1255 should be amended to reflect current usage. Therefore, the owner of Manila Market has asked that the times for delivery be extended to be from 7:00 AM to 1:00 PM in order to accommodate the increase in deliveries to the Manila Oriental Market because of its present popularity in Daly City as one of only a few markets on the Peninsula specializing in Asian foods. As an essential business during COVID, it was critical for Manila Oriental to receive the necessary deliveries in provide these groceries to the residents. It should be noted that deliveries are made at the back of the building in the under-utilized upper lot.

Summary

The City, we are sure, shares the opinion of owner of the King Plaza Center and all of the businesses that share its parking, that we want all of the businesses to prosper and be successful. When there is not enough parking to accommodate all of the businesses, it causes conflicts among the employees and customers of those businesses, and causes conflicts with the neighbors from overflow parking and blocked traffic circulation as drivers go around the residential neighborhood looking for the elusive parking space they need. The parking conflicts are harming that success because without sufficient parking the businesses will suffer as customers go elsewhere when they find no parking available at the Center.

The proposed Parking Management Plan and CC&Rs attempt to use generally accepted parking management and time-tested parking time limits in order to better manage the parking for all users, as is done elsewhere in Daly City with time limited parking. Further, it directs employees to park in the upper lot instead of parking in customer spaces. It provides time limits for about 50% of the spaces, leaving 50% of the spaces without time limits. The time limits apply to anyone using the shopping center parking, whether they are coming for groceries, for dining at one of the restaurants, or for bowling. All users are treated in the same manner, without distinction.

Amending Ordinance 1255 to allow for delivery times of goods to Manila Oriental Market to expand to 7 AM to 1 PM will allow Manila Oriental Market to better serve its clientele with specialty Asian foods during times when those delivery companies make such deliveries, and

when employees are on site to take delivery and move it into the market. By having daytime deliveries it also reduces the impact to the residential neighborhood so that heavy truck traffic and unloading and hauling does not occur after 11 PM when most residential neighbors are trying to sleep.

Thank you for your assistance in resolving these matters. If further information is needed, please let us know.

Sincerely,
LAW OFFICE OF JANET FOGARTY

Janet Fogarty

Janet Fogarty

CC: Rose Zimmerman
Tatum Mothershead

Mark Hudak
John Fitzgerald
Steven B. Piser
James Barrett
Steven McLellan
King Plaza Center, LLC

LAW OFFICES OF
MARK D. HUDAK

177 Bovet Road, Suite 600
San Mateo, CA 94402

(650) 638-2390
Mark@mhudaklaw.com

August 29, 2022

By Hand

Planning Commission
City of Daly City
333 90th Street
Daly City, CA 94015-1895

Re: Classic Bowling Center/King Plaza Shopping Center

Dear Commissioners:

My office represents DBP, a California general partnership. DBP owns the property that is leased to the Classic Bowling Center. This letter and its attachments set forth DBP's comments, objections, and recommendations regarding the proposed Parking Management Plan and the Conditions, Covenants & Restraints ("CC&Rs") submitted by the owners of the King Plaza Shopping Center (the "King Plaza Owners").

The Bowling Center parcel and the two shopping center parcels[1] have a long history, which we detail in Exhibit A. As you will see, the three parcels are required to share parking. When the Bowling Center was approved and built, parking for the combined recreational, retail, services, and food uses was adequate. In order to ensure that equilibrium would be maintained, the owners of the shopping center had to meet certain requirements established by the City Council. These included bringing in a balanced mix of tenants with compatible peak hours and parking needs, implementing a program to control and lessen employee parking, and submitting leasing documents to City staff for review. These requirements are set forth in the 1998 Planned Development Standards included with Exhibit A.

These Development Standards have not been met. Over the last ten-plus years, there has been a steady transition from a mix of uses in the shopping center to predominantly food uses, now about 80% of the shopping center's rentable area. These food uses have more employees, customers, and deliveries than other types of businesses and their peak hours tend to come at the same time, creating a parking crisis for everyone. Why haven't the Development Standards been enforced?

The King Plaza Owners have brought forward a parking plan and CC&Rs that are not consistent with the Development Standards. They would have the potential to put the Bowling Center out

[1] The King Plaza Shopping Center is located on two separate legal parcels but operates as one unit.

of business. The most objectionable points are:

- One-hour and two-hour parking limit for many spaces near the Bowling Center, which is not adequate for patrons of the Bowling Center.

- Converting the use of spaces on the shopping center parcels to a mere license, which the King Plaza Owners could terminate and bar Bowling Center patrons from using the spaces.

- An annual fee starting at $96,000 for use of the spaces on the shopping center parcels, when the use of those spaces is guaranteed by the Zoning Code and Development Standards.

A detailed discussion of DBP's objections is found at Exhibit B, including the professional observations of a parking engineer and a consultant on bowling operations. What professional engineering data and opinions support the proposal from the King Plaza Owners?

Fundamentally, the proposed parking plan does nothing to increase supply or decrease demand. Instead, the creation of one-hour and two-hour spaces will drive employees to park in the untimed spaces, leaving an inadequate supply for bowlers. The proposed plan would further exacerbate the problems caused by the failure of the King Plaza Owners to follow the Development Standards for PD-47.

There is an additional factor to consider. In order to obtain City approval to divide ownership of the shopping center parcels from the bowling center parcel, the owners at the time entered into a reciprocal easement agreement. The agreement was signed and notarized but was not recorded at the time due to an error by the title company. This came to light when the shopping center was being sold to the Ho family in 2007, but they signed a statement acknowledging the easement and are bound by it. The reciprocal easement guarantees equal, shared use of all spaces on the three parcels, without fees. The City should not be approving a zoning amendment that is contrary to the private rights established by the easement. These issues are addressed in Exhibit C.

Although the parking problems were brought on by the failure of the King Plaza Owners to follow the Development Standards, all tenants at the properties are suffering and something should be done. But that "something" should not make the situation worse. The City needs to ensure that any proposed parking plan or modifications to the Development Standards are effective and equitable. Any modifications should be supported by professional advice and not penalize the Bowling Center and its patrons, who have not caused the problem.

Going forward, the City should retain an independent parking consultant (at the shared expense of the two ownership groups) to study the situation, gather reliable data, and make recommendations for further improvements in operations. While the City and the parties go through this process, the owners should continue to abide by their interim settlement agreement to alleviate some of the parking problems. These recommendations are discussed in Exhibit D.

Classic Bowling Center is a unique community asset. It provides healthy activities for young and old. There is no similar center in the North County and, if this one is forced out of business by a one-sided parking plan, it is unlikely to be replaced.

At the end of the day, DBP and its tenant face a parking problem that is not of their making. The solution to the problem should not come at their expense. Imposing the Ho family's Parking Management Plan and CC&Rs, even for a short period, could cause irreparable damage to the Bowling Center. We urge you not to approve the proposed zoning amendment.

We look forward to discussing these points with you on September 6. In the meantime, if you have any questions, please contact me.

Very truly yours,

Mark D. Hudak

Attachments

EXHIBIT A

Background and Zoning Requirements

The properties in question are in the PD - 47 Planned Development Zone. They comprise Parcels A and A-1 (the King Plaza shopping center parcels) and Parcel B (the Classic Bowling Center property).

Some history is relevant to understanding the current situation. Originally, all three parcels were under common ownership by DBP Investments. In 1990, an investor/developer, Jeffrey Litke, was brought in to resurrect the struggling shopping center. Litke and DBP wanted to subdivide the property so that Litke would have the retail parcels and DBP would have the Bowling Center parcel. The problem was that there was not enough parking on the Bowling Center parcel, even though there was plenty of parking available on the Shopping Center parcels. Litke and DBP went through an extended process with the City to come up with a plan to ensure that the Bowling Center would have enforceable parking rights on the Shopping Center parcels once they were no longer under common ownership.

In 1991, the City approved the subdivision and created a new zoning district, PD-47. But the proposed subdivision was not completed due to disagreements between Litke and DBP.

In 1997, the parties came up with a solution. They executed a reciprocal easement guaranteeing each party mutual, non-exclusive rights to use the parking on all parcels and providing for shared maintenance costs.[1] The transfer of ownership of the separate parcels was conditioned upon execution of the reciprocal easement by all parties.

With this enforceable agreement in place to ensure adequate parking throughout the entire center, the City adopted amended Planned Development Standards for the three parcels. A copy of the Planned Development Standards are attached. A key component is that the parking spaces on all parcels are to be shared for all patrons. At the time, parking for the uses on the properties was at equilibrium. The Development Standards impose several requirements on the property owners. These include:

- The shopping center management shall formulate and implement a program to control and lessen employee parking.
- The owners shall seek to provide "a balanced mix of uses with compatible peak hours and parking needs."
- Lease documents shall be submitted to the Planning Division for approval.

The Development Standards require that the property owners agree on a Parking Management Plan, to be approved by the City and recorded as part of the Shopping Center CC&Rs. Although no formal plan was prepared, Litke and DBP performed in accordance with the reciprocal easement, sharing parking and expenses.

---

[1] Please see Exhibit C for a further discussion of the easement and its enforceability.

Problems developed after the King Plaza parcels were sold to the Ho family in 2007.

In 1990, when Litke became an owner, food uses on the Shopping Center parcels comprised about 15% of rentable space. In 1998, when the City adopted the current Development Standards, the food uses had grown to 50%, through the expansion of the Manila Market and new restaurants. Over the past 10 years, food uses have continued to expand. Currently, food uses comprise about 80% of the Shopping Center. This shift from retail and personal services to food uses with more intense parking demand has created the parking crisis in PD-47, particularly on weekends.

Attempts by the King Plaza owners to limit parking for the patrons of the Bowling Center in violation of the Development Standards and the reciprocal easement led to a lawsuit between the parties. Trial in one action is scheduled for November.

The King Plaza owners have brought forward a proposed Parking Management Plan and CC&Rs. The King Plaza owners have not provided parking, traffic, or other professional studies to support their proposal. Their plan is one-sided and would create untenable operational problems for the Bowling Center. It is not consistent with the reciprocal easement, which guarantees mutual, nonexclusive parking rights across all parcels. The specific defects with the Parking Management Plan and CC&Rs are discussed in detail in Exhibit B.

In summary, the Shopping Center parcels have been leased up with a radical imbalance of food uses, in violation of the 1998 Development Standards. The parking problems created by this violation should not be solved by taking away the rights of DBP and the Bowling Center.

In evaluating the Ho family's request that their Parking Management Plan be imposed as part of the Development Standards for PC-47, the Commission should ask the applicants and staff:

1. What engineering studies have been done to evaluate the effectiveness and impacts of the proposed plan on the tenants on all three parcels and on surrounding neighborhood parking resources?

2. How many employees work at the Shopping Center Businesses and at the Bowling Center. Where will these employees park?

3. Is there a balanced mix of tenant uses on the King Plaza parcels as required by the 1998 Development Standards?

4. Has staff been provided with copies of the leases for the King Plaza parcels as required by the 1998 Development Standards?

5. What actions should be taken to bring the King Plaza parcels into compliance with the Development Standards?

6. Can the City impose a Parking Management Plan that is not consistent with the reciprocal easement?

7. Are the proposed plan and CC&Rs consistent with the objectives of the Development Standards and fair to both sets of owners? Or will these proposed documents work an unfair hardship on the Bowling Center?

Attachments: 1998 Planned Development Standards

PLANNED DEVELOPMENT STANDARDS
PD-47: King Plaza Shopping Center

The purpose and intent of these Planned Development Standards is to modify the previously established standards of the PD-47 zone at King Plaza.

I. PERMITTED USES

The Planned Development Standards for PD-47 have been divided into applicable standards for three separate parcels. Parcel "A" is comprised of all shopping center property not including the bowling center property. Parcel "A-1" will refer to the corner lot at Callan and King Drive specifically. Parcel "B" refers to the bowling center property (See Attachment A – Planned Development Parcels).

A. The following uses shall be permitted:

1. Parcels A, A-1 and B

Art Studio
Bakery (retail)
Bank
Barber or Beauty shop
Book or stationary store
Business office
Candy store
Clothing or Department store
Coffee shop (excluding restaurant-style coffee shop)
Drugstore
Retail electrical and household appliance sales and services
Florist
Gift shop
One grocery store
Hardware store
Ice cream store
Laundry or cleaning agency (retail)
Instruction studio (dance or martial arts)
Jewelry store
Liquor store
Medical/Dental clinic
Pet food store
Professional office
Photographic studio
Restaurant (excluding drive-through)
Shoe repair
Sporting goods
Tailor shop

Exhibit "A" (seven pages)

DEV 06435

Trade or business school
Toy Store
Travel agent
Variety store
Video rental

B. The following uses will be permitted with a Use Permit in the PD-47 zone:

1. Parcels A, A-1 and B

Accessory buildings or use
Animal Kennel
Bar or Cocktail lounge
Bowling Alley
Garden supply
One health and fitness club (Limited to 10,668 sq. ft. in the retail building on the west of the site, in the bowling alley building or on the corner lot at Callan and King Drive)
Motor vehicle parts supply
Outdoor sales
Pet shop
Businesses whose principal use is for the operation of amusement devices
Veterinary hospital or office

C. When a use is not specifically listed, it shall be assumed that when the unlisted use is similar to nor more objectionable than a permitted use, such use shall be permitted in the district to the same requirements of the most similarly listed use.

II. DEVELOPMENT STANDARDS

A. Parking and Circulation

1. Parcels A, A-1 and B

a. The property owners shall comply with and enforce a Parking Management Plan approved by the City. The Parking Management Plan shall be an appendix to and recorded as part of the Shopping Center CC&Rs. Changes to the Parking Management Plan shall be subject to approval by the Planning Division. The Parking Management Plan shall include the following:

Trade or business school
Toy Store
Travel agent
Variety store
Video rental

B. **The following uses will be permitted with a Use Permit in the PD-47 zone:**

1. **Parcels A, A-1 and B**

Accessory buildings or use
Animal Kennel
Bar or Cocktail lounge
Bowling Alley
Garden supply
One health and fitness club (Limited to 10,668 sq. ft. in the retail building on the west of the site, in the bowling alley building or on the corner lot at Callan and King Drive)
Motor vehicle parts supply
Outdoor sales
Pet shop
Businesses whose principal use is for the operation of amusement devices
Veterinary hospital or office

C. When a use is not specifically listed, it shall be assumed that when the unlisted use is similar to nor more objectionable than a permitted use, such use shall be permitted in the district to the same requirements of the most similarly listed use.

II. DEVELOPMENT STANDARDS

A. **Parking and Circulation**

1. **Parcels A, A-1 and B**

a. The property owners shall comply with and enforce a Parking Management Plan approved by the City. The Parking Management Plan shall be an appendix to and recorded as part of the Shopping Center CC&Rs. Changes to the Parking Management Plan shall be subject to approval by the Planning Division. The Parking Management Plan shall include the following:

b. No operable or inoperable vehicles shall be stored at the site for more than 24 hours.

c. No vehicles or trailers shall be advertised for sale or rent on the site and no vehicle sales, leasing or rentals shall be conducted at the site.

d. Employee parking spaces shall be designated in the plan.

e. Measures to manage the parking during the evening peak hours. The plan may include such measures as valet parking, incentives to carpooling and disincentives to parking in the residential streets behind the center.

e. Lease documents of existing and future tenants shall incorporate compliance with the Parking Management Plan as a requirement of the lease. Lease documents shall be submitted to the Planning Division for approval.

f. A provision to allow shared parking for patrons of all uses in Parcel A, Parcel A-1 and B.

g. The precise plan shall show all required dimensions on back-up distance, fire access drives and parking stalls, including compact and handicap spaces. The plan shall indicate how the compact spaces shall be marked on the site.

h. The shopping center management shall formulate and implement a program to control and lessen employee parking on the site. The Planning Division shall approve this program.

i. Applicant will post signs, impose conditions upon tenant, and make every effort to restrict deliveries to the supermarket from parking in the customer parking lot by large semi-trucks, refrigerated trucks, or trucks larger than a four wheel delivery van between the ours of 8:00 a.m. and 7:00 p.m. seven days per week. Smaller delivery vehicles may make such deliveries.

j. The total number of on-site parking spaces required for the King Plaza Shopping Center (Parcel A, Parcel A-1, and B) is 302 not including the corner lot at Callan and King Drive.

2. Parcel A

a. The precise plan shall be configured to allow for wider parking spaces in front of the supermarket.

3. Parcel A-1

a. The corner lot at Callan and King Drive shall be improved with resurfacing, restriping, landscaping and a monument sign.

b. All parking spaces for new construction at the corner lot at Callan and King Drive must conform to regular size parking stall dimensions of the Zoning Ordinance. Total parking for new development on Parcel A-1 shall include the number of existing spaces in addition to spaces required by the Zoning Ordinance. All aisle widths must be at least 26 feet in width and turning radiuses must conform to minimum Fire Department and City Zoning Ordinance requirements.

c. The parking lot shall conform to plans approved as part of the precise plans and shall be maintained in accordance with city standards.

B. Signage

1. Parcels A, A-1 and B

a. A Master Sign Program shall be submitted and approved by a Design Review Committee. Changes to the Master Sign Program shall be submitted to the Design Review Committee for approval, except that minor changes can be approved administratively by the Planning Division.

b. Wall sign and ground sign area, height and number shall comply with approved designs described in the adopted Master Sign Program. Existing tenant signs shall be allowed to remain and changes in copy shall not require compliance with the master sign program. However, other types of changes including relocation shall require that the new sign be in conformance with the program.

c. Signs shall otherwise comply with the requirements of Section 17.32 Signs of the Daly City Zoning Ordinance, except as

2. Parcel A

a. The precise plan shall be configured to allow for wider parking spaces in front of the supermarket.

3. Parcel A-1

a. The corner lot at Callan and King Drive shall be improved with resurfacing, restriping, landscaping and a monument sign.

b. All parking spaces for new construction at the corner lot at Callan and King Drive must conform to regular size parking stall dimensions of the Zoning Ordinance. Total parking for new development on Parcel A-1 shall include the number of existing spaces in addition to spaces required by the Zoning Ordinance. All aisle widths must be at least 26 feet in width and turning radiuses must conform to minimum Fire Department and City Zoning Ordinance requirements.

c. The parking lot shall conform to plans approved as part of the precise plans and shall be maintained in accordance with city standards.

B. Signage

1. Parcels A, A-1 and B

a. A Master Sign Program shall be submitted and approved by a Design Review Committee. Changes to the Master Sign Program shall be submitted to the Design Review Committee for approval, except that minor changes can be approved administratively by the Planning Division.

b. Wall sign and ground sign area, height and number shall comply with approved designs described in the adopted Master Sign Program. Existing tenant signs shall be allowed to remain and changes in copy shall not require compliance with the master sign program. However, other types of changes including relocation shall require that the new sign be in conformance with the program.

c. Signs shall otherwise comply with the requirements of Section 17.32 Signs of the Daly City Zoning Ordinance, except as

conditioned herein or as modified by the approved Master Sign Program.

C. Landscaping

1. Parcels A, A-1 and B

a. Landscaping shall be installed in accordance with approved plans and maintained in a neat, clean and healthful condition.

D. Architecture/Site Design

1. Parcels A, A-1 and B

a. Architectural design of all structures and facades, all materials and colors, and all landscaping shall comply with plans approved by a Design Review Committee.

b. Once approved, any major architectural modification shall be subject to approval by a Design Review Committee, except that minor changes may be approved administratively by the Planning Division.

c. All roof equipment shall be screened from view from the surrounding streets.

d. The Planning Division shall approve the design and location of all trash or storage enclosures and other proposed fencing or walls.

E. Maintenance

1. Parcels A, A-1 and B

a. The property owners shall prepare CC&Rs for review by the City Attorney, which incorporate the following standards:

b. The shopping center shall be maintained in a neat, safe, and healthful condition.

c. A garbage disposal plan approved by the Planning Division and the Streets Division shall specify that:

d. All trash shall be confined in approved receptacles and enclosures.

Exhibit "A" (seven pages)

DEV 06441

conditioned herein or as modified by the approved Master Sign Program.

C. **Landscaping**

1. **Parcels A, A-1 and B**

a. Landscaping shall be installed in accordance with approved plans and maintained in a neat, clean and healthful condition.

D. **Architecture/Site Design**

1. **Parcels A, A-1 and B**

a. Architectural design of all structures and facades, all materials and colors, and all landscaping shall comply with plans approved by a Design Review Committee.

b. Once approved, any major architectural modification shall be subject to approval by a Design Review Committee, except that minor changes may be approved administratively by the Planning Division.

c. All roof equipment shall be screened from view from the surrounding streets.

d. The Planning Division shall approve the design and location of all trash or storage enclosures and other proposed fencing or walls.

E. **Maintenance**

1. **Parcels A, A-1 and B**

a. The property owners shall prepare CC&Rs for review by the City Attorney, which incorporate the following standards:

b. The shopping center shall be maintained in a neat, safe, and healthful condition.

c. A garbage disposal plan approved by the Planning Division and the Streets Division shall specify that:

d. All trash shall be confined in approved receptacles and enclosures.

e. All unenclosed materials, equipment and/or supplies of any kind shall be maintained within approved enclosure areas. Any stacked or stored items shall not exceed the height of the enclosure.

f. All trash and storage enclosures shall be properly maintained in accordance with approved plans.

g. The applicant shall prepare an agreement to implement a daily litter cleanup plan for all open areas, planters and public sidewalks adjacent to the shopping center. All waste materials generated by the market, such as cardboard boxes, skids, garbage, litter, etc., must be stored in the enclosure for disposal. No waste material shall be visible at anytime. The enclosure shall be designed to conceal the contents. The enclosure should be kept clean and free of odor at all times.

F. Lighting

1. Parcels A, A-1 and B

a. All exterior lighting shall be in accordance with precise plans and shall be adequately maintained according to approved standards.

G. Building Area Limitation

1. Parcel A

a. There shall be no additional square footage allowed in the shopping center beyond the existing 57,890 square feet (excluding the bowling center property and the corner lot at Callan and King Drive).

H. Required Plans

1. Parcel A-1

a. Any proposed development on the corner lot at Callan and King Drive shall be by the amendment procedures of Daly City Municipal Code Section 17.28.020(I).

b. The precise plan for this planned development shall also identify:

1. Ingress/egress and easement rights for all public utilities, city water mains, sanitary sewer mains and other service facilities located across the proposed subdivision lines.

2. Location of all existing buildings and structures and their off-set distances from the proposed property lines.

G. **Easements**

1. **Parcel B**

a. A twenty-foot no-build easement shall be recorded around the bowling center building and reflected in the precise plan.

III. **GENERAL**

A. **Parcels A, A-1 and B**

1. All site improvements shall conform to plans approved as part of the Precise Plans. Any major site modifications shall require an amendment of the PD approval and shall be subject to approval by the Planning Commission and City Council except that the Planning Division may approve minor changes.

2. Individual buildings shall not be sold separately, or if the sale of any building is anticipated, all requirements of the Subdivision Ordinance in effect at the time of the sale shall be complied with in full prior to such sale.

3. The property owners of the shopping center shall seek to provide a balanced mix of uses with compatible peak hours and parking needs.

c:/ms971pd(3)

Exhibit "A" (seven pages)

DEV 06444

EXHIBIT B

Analysis of Proposed Parking Management Plan and CC&Rs

The owners of the Classic Bowling Parcel have retained experts to help them understand the parking situation and how restrictions on parking may affect the operation of the bowling center,

A critical component for the Bowling Center is league and tournament bowling. These activities are a substantial part of the Bowling Center's business. The rest are casual, walk-in bowlers. Bowlers in league and tournament play typically stay 2.5-3.00 hours or more, including gearing up, practice, games, and some socializing at the end. If there are not enough spaces available with 3-4 hour time limits, league and tournament bowling, which is the lifeblood of the Bowling Center, will be in jeopardy.

The proposed Parking Management Plan would have 159 unlimited time parking spaces scattered throughout the three parcels. Many of the spaces are located far from the Bowling Center and are not realistic opportunities for bowlers. Further, there is no provision for reserving these spaces for bowlers who need them for three hours or more. They could be taken up by employees of any tenant or customers for other businesses. Since peak parking demand for the Bowling Center can exceed 140 spaces, even minimal use by shopping center employees or customers will not leave enough parking for the Bowling Center.

Further, shoppers and diners for the King Plaza tenants can use any of the untimed spaces as well as the one-hour and two hour spaces. They will not be limited to bowlers. But the converse is not true – the bowlers cannot use the timed spaces, particularly during league and tournament play. So, realistically, how many of the 159 untimed spaces would be available for bowlers when needed?

Please see the attached letters from Gary Black, the parking engineer, Ken Mischel, the consultant on bowling center operations, Classic Bowling Center which explain in detail the problems created by this plan.

In addition to the inadequate spaces for bowlers, the proposed CC&Rs impose conditions that are not acceptable to DBP. These include:

- Reducing the right to use parking on the King Plaza parcels to a mere license that can be terminated by the King Plaza owners on certain conditions, eliminating the shared parking guaranteed by the Development Standards and by the easement agreement (discussed in Exhibit C).

- Imposition of an annual license fee, starting at $96,000, to be paid by the Bowling Center owners for use of the shared parking guaranteed by the Development Standards. (This is separate from the payment of maintenance and common area improvement charges, which historically have been shared 50-50.)

- Enforcement by the King Plaza Owners alone, allowing for potential selective enforcement against bowlers.

In evaluating the proposed Parking Management Plan and draft CC&Rs, the Commission should ask the applicant and staff:

1. Is the proposed zoning amendment and parking plan a "project" that requires CEQA analysis? Has staff performed an initial study to determine whether the impacts of the proposed amendment and parking plan, including impacts on surrounding neighborhoods, should be evaluated?

2. What parking studies, parking counts, and ITE parking demand standards support the proposed plan? Did the applicant perform parking counts to determine actual usage, including which customers are parking where, and for how long?

3. Why isn't the proposed parking plan stamped by a professional engineer?

4. How many full and part-time employees are at the shopping center on a daily basis? Where will they park under this proposed plan? How will that affect parking for bowlers? If employees cannot find parking, will they be forced into surrounding neighborhoods?

5. Has the proposed plan evaluated by an independent parking engineer? Should the City retain a neutral consultant to provide advice, at the parties' expense?

6. How does the proposed plan accommodate the needs of league and tournament bowlers? What impacts will the proposed plan have on operations at the Bowling Center?

7. How has the increase in the food use tenants on the King Plaza parcels affected parking demand? What measures have the owners of the King Plaza parcels taken to address the parking demands for these tenants? Are there better ways to accommodate the increased parking demand created by the evolving tenant mix?

8. As part of any zoning amendment, should the City require a use permit for any future food uses to help control excess parking demand?

9. Is the conversion of the spaces on the King Plaza parcels to a license arrangement be consistent with the Development Standards and the reciprocal easement? What would happen if the King Plaza owners terminated the license?

9. Do the Development Standards allow one party to charge the other a fee for using the shared parking? Is a fee allowed under the terms of the reciprocal easement?

The parking issues at the shopping center have been brought on by the leasing decisions of the King Plaza owners in violation of the 1998 Development Standards. There is now too much demand for the available spaces. The problems should not be solved by taking away the rights of the Bowling Center, which could drive it out of business.

In the end, the proliferation of food uses means that there is too much demand for the available spaces. The overdemand will not be solved by time limits on spaces, which do not increase supply or reduce demand. Better solutions are needed.

Attachments:

Gary Black letter

Ken Mischel letter

Classic Bowling Center letter

Draft CC&Rs

HEXAGON TRANSPORTATION CONSULTANTS, INC.

August 26, 2022

Mr. Mark Hudak
Law Offices of Mark D. Hudak
177 Bovet Road, Suite 600
San Mateo, CA 94402

Re: Parking Management Plan for King Plaza in Daly City, California

Dear Mr. Hudak:

Hexagon Transportation Consultants, Inc. has reviewed the attached proposed Parking Management Plan (PMP) for King Plaza in Daly City, California. Hexagon has prepared parking studies on behalf of the bowling alley at King Plaza, so we are aware of the parking issues. Based on our research at King Plaza, we question the logic of the PMP. We would expect a plan like this to be prepared by a transportation professional with supporting study documentation for how it would work. We are not aware that such study documentation has been provided.

Hexagon's research at King Plaza showed that the bowling alley has a maximum demand of about 120 parking spaces. Furthermore, the research showed that the average duration of bowling alley parking is 3 hours. The PMP includes 150 spaces that would be restricted to two-hour parking or less (some one-hour, some 20 minutes). Parking spaces limited to 2-hour parking typically could not be used by bowling alley customers. The PMP includes 168 parking spaces that would not be time-restricted. These could serve the bowling alley and all employees of the Plaza. However, Hexagon estimates that non-bowling alley employees total about 120 at peak times. Thus, 240 non-restricted spaces are needed (120 for bowling alley + 120 for employees) while only 168 would be provided by the PMP. The PMP states that employees would be required to park on the street. However, there is no assurance that on-street spaces would be available because they can be used by any member of the public.

Hexagon notes that the PMP also includes a provision for dealing with "large scale evening events." This provision is ill-defined (what is a "large scale evening event"?) and seems unnecessary. Hexagon is not aware of any such events that occur at the center. Also, counts showed that existing parking demand in the evening is low.

We appreciate the opportunity to review the PMP. If you have any questions, please do not hesitate to call.

Sincerely,
HEXAGON TRANSPORTATION CONSULTANTS, INC.

Gary K. Black
President

100 Century Center Court, Suite 501 · San Jose, California 95112 · phone 408.971.6100 · fax 408.971.6102 · www.hextrans.com

MISCHEL &COMPANY
BOWLING & ENTERTAINMENT CENTERS
BROKERAGE . APPRAISALS . CONSULTING
432 BONITO AVE. ~ IMPERIAL BEACH, CA ~ 91932
t 619.423.2001 ~ f 866.882.5870
mischelco@msn.com ~ mischelcompany.com

The Hansell Group
Bowling & Entertainment Center Brokerage, Valuations, Consulting

August 28, 2022

Mark Hudak
Law Offices of Mark D. Hudak
177 Dover Road, Suite 600
San Mateo, CA 94402

RE: Kings Plaza Center – Parking Lot Management Plan

Dear Mr. Hudak:

I've been asked to give my professional opinion as to the impact the proposed King Plaza Center – Parking Management Plan would have on Classic Bowling Center, located at 900 King Drive in Daly City.

My opinion is based on a review of the current plan, my research and testimony as a bowling expert in December of 2018 as well as my current understanding of bowling industry data, trends & parking requirements for bowling centers such as Classic Bowling Center.

Classic Bowling Center is a 60-lane, traditional bowling center that has served as a community gathering place for many years. It's customer base consists of league bowlers (senior, youth & adult), casual "drop-in" customers, and tournament bowlers as well as group, birthday & charity event participants. Total visit time for customers – including bowling, food & beverage, and socializing – is normally over three hours.

The Parking Lot Management Plan shows that 147 of the parking spaces are to be restricted to one- or two-hour parking limits and many of those spaces are near the

bowling center. This, along with other restricted parking (zoning, ADA, loading & unloading, etc.) leaves only 106 unlimited spaces for the bowling center (as well as other shopping center customers). 74 of the unlimited spaces are in the far reaches of the shopping center, which means that bowling center customers parking in those spaces will have to haul their bowling equipment across virtually the entire lot to get to the bowling center. Many of those customers are senior citizens.

In my opinion, a great number of customers of the bowling center will be lost to other competing venues or will stop their participation in this type of recreation entirely if they cannot find a place to comfortably park during their center visit.

As a result of the proposed Parking Lot Management Plan, Classic Bowling Center will suffer a severe decline in customers and revenues with a significant loss of value and may eventually force the business to close permanently.

Respectfully Submitted,

K. Mischel

Kenneth R. Mischel, President
Mischel & Company

Classic Bowling Center

900 King Drive

Daly City, CA 94015

(650) 878-0300

www.classicbowling.com

August 29, 2022

Planning Commission
City of Daly City
333 90th Street
Daly City, CA 94015

Re: September 6, 2022 Hearing
King Plaza Shopping Center

Dear Commissioners:

Our company is the tenant that operates the Classic Bowling Center. We are writing to help you understand the enormous impact that the proposed parking management plan would have on the operations of our Classic Bowl. It is not an exaggeration to say that the time limits being proposed could cost us our business.

Classic Bowl is a true community resource. We serve young and old, singly and in groups. We provide fun, healthy activities along with food and beverages. A good time is had by all.

We have 60 lanes available for play. This is the same number of lanes we have always had. Our use has remained stable over time. We managed to survive the pandemic and we are looking forward to many more years serving the North County.

The way things are now, league play and tournaments are a substantial part of our business. The rest of our business are walk-ins and small groups out for a fun afternoon or evening.

Bowlers who come to the Classic Bowl for league or tournament play generally spend a minimum of three hours. This includes putting on equipment, warming up, and bowling the multiple games for their league or tourney. Often, bowlers will stay a little longer for a bite to eat or something to drink and socialize.

With some league and tournament play, we will have 110-120 bowlers participating. Since these groups do not use all of the lanes, we would have lanes available for casual bowlers as well. In addition, we need to have spaces available for our employees. Any parking plan needs to demonstrate how our peak parking needs will be met.

The parking plan being proposed by the shopping center owners would be a disaster. Our league and tournament bowlers can't use the one-hour and two hour spaces. If they did park in those spaces, they would have to be watching the clock, then interrupt their games, run out and move their cars, hoping to find a new space. During lunch, dinner, and weekends, that could take a long time. League and tournament bowlers won't put up with that. They want to stay in rhythm and keep playing. Worse, if some bowlers have their cars towed because they stayed a few minutes too long in a space, the leagues and tournaments are just going to go elsewhere. Bowling is supposed to be a relaxing fun time out, not a source of worry and anger.

Although some of the untimed spaces are located near our entrances, they are also close to the restaurants and shops across the parking lot, so many of these spaces can be taken by their customers and diners. There is no guarantee that the untimed spaces near the Classic Bowl will be available for use by our bowlers.

Some of the other untimed spaces are located far away from the Bowling Center and are not really an option for our bowlers.

Right now, we get a lot of complaints about parking, especially on weekends, but we are holding steady. As long as our bowlers have the freedom to use spaces throughout the shopping center, we will be able to survive. Better options for employee parking and deliveries for all tenants would help, too.

Please do not approve the parking plan offered by the shopping center owners. It would quickly cost us our league and tournament bowlers and we would then be out of business.

We know that everyone wants to "do something" about the parking situation. But the proposed plan will make things worse, not better.

Please let us know if you have any questions. Thanks you for listening to our concerns.

Sincerely,

For: Classic Bowling Center

KING PLAZA SHOPPING CENTER 2022 DECLARATION OF COVENANTS, CONDITIONS, AND RESTRICTIONS

CHAPTER ONE: GENERAL PROVISIONS

A. *Name of Instrument* This instrument may be referred to as the "King Plaza Shopping Center 2022 Declaration of Covenants, Conditions, and Restrictions." This instrument is herein referred to as "these CC&R's." These CC&R's shall also be construed to include any plan submitted by Declarant and approved by the City of Daly City pursuant to these CC&Rs.

B. *Declarant* "Declarant" is King Plaza Center, LLC, a Delaware limited liability company. For purposes of construing these CC&R's, the term "Declarant" shall include any transferee, successor, or assignee of King Plaza Center, LLC, including but not limited to a transferee, successor, or assignee by operation of law or a "Mortgagee" acquiring Declarant's interest in the Development by foreclosure or by deed in lieu of foreclosure. The term "Mortgagee" as used herein is defined in Chapter 8, Section D.

C. *Shopping Center Parcel* Declarant is the owner of that certain real property located in the City of Daly City, San Mateo County, State of California, more particularly described as shown on that Description of Property attached hereto as **Exhibit "A"** and incorporated by reference herein, commonly known as 950-980 King Drive, Assessor Parcel Number 091-175-220, being 4.279 acres, referenced as the "Shopping Center Parcel" herein. The Shopping Center Parcel includes land referenced as Lot A and Lot A-1 in City of Daly City Ordinance 1255 adopted on April 27, 1998.

D. *Tenants* "Tenants" are those persons and entities who now or in the future possess leasehold interests in the Shopping Center Parcel pursuant to written leases with Declarant.

E. *Common Areas* "Common Areas" as used herein means all realty and improvements in or to the Shopping Center Parcel that are not leased to any Tenants and that are designated by Declarant for the joint use and benefit of Declarant and all Tenants, specifically including all parking areas, access roads, driveways, entrances and exits, retaining walls, landscaped areas, truck service-ways, loading docks, pedestrian malls, courts, stairs, ramps, sidewalks, exterior stairs, utilities and related utility lines and meters, and on-site and off-site signs identifying or advertising the Shopping Center.

F. *Bowling Alley Parcel* The "Bowling Alley Parcel" is the property commonly known as 900 King Drive, also located in the City of Daly City, San Mateo County, State of California, more particularly described as shown on that Description of Property attached hereto as **Exhibit "B"** and incorporated by reference, and identified by Assessor Parcel Number 091-175-200. Said parcel is improved with a structure that contains a bowling alley operating under a conditional use permit. Upon information and belief, the Bowling Alley Parcel is currently owned by DBP Investments, a California General Partnership.

G. *Prior Subdivision & Certificate of Compliance* The Shopping Center Parcel and Bowling Alley Parcel were created by the division of three parcels (former Assessor Parcel Numbers 091-175-190, 091-175-150, and 191-175-180) into two parcels as evidenced by that certain Certificate of Compliance recorded in the Official Records of San Mateo County on September 25, 2000 as document number 2000-118884. Said Certificate of Compliance states on its face that it "is subject to the findings and conditions of Minor Subdivision MS97-1 and resolution 98-26 of the City of Daly City."

H. *Purpose* Declarant's purpose in executing these CC&Rs is to govern the Common Areas of the Shopping Center Parcel, to enhance, maintain, and protect the value and attractiveness of the Shopping Center Parcel, and to otherwise comply with the requirements of the aforementioned Certificate of Compliance, including the findings and conditions of Minor Subdivision MS97-1 and Resolution 98-26, as well as City of Daly City Ordinance 1255. The provisions of these CC&R's and any licenses thereunder shall be liberally construed to effect its purpose.

I. *Bowling Alley CC&R's* It is anticipated that the owner of the Bowling Alley Parcel will submit CC&R's for approval of the City of Daly City as to covenants, conditions, and restrictions applicable to the Bowling Alley Parcel. These CC&R's do not purport to regulate the Bowling Alley Parcel and shall not be so construed.

J. *No CID Intended* Declarant does *not* intend these CC&R's to be a plan of Shopping Center Parcel ownership that is a common interest development under California Civil Code §6534, and does *not* intend that their ownership be governed by the California Commercial CID Act (Cal. Civil Code §§6500 *et seq.*). Other than the rights granted and restrictions set forth herein, no other rights or restrictions are contemplated, and no plan of joint ownership, partnership or joint venture is intended to be created.

K. *Declarant's Reservation of Rights* All rights not expressly granted by these CC&R's are reserved to Declarant. Said rights include, but are not limited to, all rights to future development of the Shopping Center Parcel pursuant to all relevant zoning and building codes as may now apply or hereafter beneficially apply to the Shopping Center Parcel, and these CC&Rs do not and are not intended to restrict the rights to so develop the Shopping Center Parcel.

L. *Effective Upon Approval & Recording by Declarant* This instrument is not effective unless (1) approved by the City of Daly City as required by the aforementioned Certificate of Compliance, and (2) recorded by Declarant in the Official Records of San Mateo County.

M. *No Waivers* Failure to enforce any provision of these CC&R's shall not constitute a waiver of the right to enforce the provision thereafter.

CHAPTER TWO: NON-EXCLUSIVE LICENSES

A. *License Offer to Tenants of Shopping Center Parcel* Declarant offers Tenants of the Shopping Center Parcel, solely during the terms of their respective leases, a non-exclusive license to use the Common Areas of the Shopping Center Parcel during such period for ingress and egress, and the parking of vehicles, subject to the covenants, conditions, and restrictions below.

B. *License Offer to Owners of Bowling Alley Parcel* Declarant offers the Owner of the Bowling Alley Parcel, solely for so long as the Bowling Alley Parcel is used exclusively as a Bowling Alley pursuant to a valid conditional use permit from the City of Daly City, a non-exclusive license to use the Common Areas of the Shopping Center Parcel during such period for ingress and egress, and the parking of vehicles, subject to the covenants, conditions, and restrictions below.

C. *Exclusive Manner of Acceptance of Offer; Licensees* The exclusive manner of acceptance of said license is as follows: The prospective licensee must deliver to Declarant a notarized statement that the licensee and all tenants of licensee agree to be bound by these CC&R's and said statement must be acknowledged and accepted in writing by Declarant, with a copy provided to the licensee. The holder of a written license under these CC&R's is referred to as a "Licensee" herein.

D. *Scope of License Includes Employees and Customers* Licensees may permit their employees and customers to use the Common Areas of the Shopping Center Parcel for ingress and egress, and the parking of vehicles during any such employees' actual shift of work and during any such customers' actual patronage of Licensee's business, subject to these CC&R's. As to the owner of the Bowling Alley Parcel, it may permit use of the license by any tenant and employees and customers of its tenant, subject to these CC&R's. However, for purposes of enforcing these CC&R's and any license thereunder, any violations of these CC&R's, or a license thereunder by a permitted user shall be deemed to be a violation by the Licensee.

E. *No Third Party Beneficiaries* These CC&R's are solely intended to benefit Declarant and Licensees; no one except Declarant has standing to enforce these CC&R's.

F. *License Subject to Government Approved Regulations & Modifications* Any and all use related to the

parking of vehicles shall be subject to parking management plan approved by the City of Daly City. Said plans may be subsequently revised by Declarant upon application to and approval by the City of Daly City for good cause, including but not limited to changed circumstances, ineffectiveness, or enforcement difficulties. Said plans shall be executed by Declarant.

G. *License Is Conditional* These CC&R's shall not be construed as extending the leasehold interest of any Tenants, or as granting an easement to any Licensee or other user; rights created by these CC&R's are intended to be in the nature of a mere conditional license to use the Common Areas of the Shopping Center Parcel in compliance with these CC&R's that may be revoked by Declarant for good cause, including but not limited to failure to abide by conditions of, or a material breach of these CC&R's. For example, good cause for revocation includes but is not limited to failure to pay fees required hereunder in a timely manner.

H. *Licenses Not Transferrable* Licenses are not transferrable or assignable. Any purported transfer or assignment of a license shall be null and void and shall automatically null and void the license itself.

I. *Declarant Has No Interest in Bowling Alley Parcel* These CC&R's shall not be construed as granting any interest whatsoever in the Bowling Alley Parcel to Declarant who hereby confirms that the owner of the Bowling Alley Parcel retains the exclusive rights to the Bowling Alley Parcel and may restrict parking on said Bowling Alley Parcel to customers of the Bowling Alley or as otherwise desired, subject to approval of the City of Daly City pursuant to the aforementioned Certificate of Compliance. Declarant likewise has no maintenance and repair obligations, or reimbursement responsibility, whatsoever with respect to the Bowling Alley Parcel.

J. *Owner of Bowling Alley Parcel May Terminate the License At-Will Upon Notice* The owner of the Bowling Alley Parcel may terminate its license under these CC&R's at any time and for any reason by delivering a notarized notice of termination a 30 days advance notice to Declarant . However, such notice of termination shall not relieve Declarant from any accrued liability arising under these CC&R's or any license thereunder, nor any tort liability.

K. *Declarant May Revoke License for Good Cause* Declarant may revoke any license for good cause which includes but is not limited to a Licensee's failure to abide by rules and regulations established by these CC&R's; a Licensee's commission of waste, nuisance, intentional torts, or crimes upon the Common Areas of the Shopping Center Parcel; or a Licensee's failure to meet conditions of, or material breach of, its License, especially but not limited to its failure to make required payments. If a license is revoked or terminated for good cause, these CC&R's shall not be construed so as to require Declarant to re-issue a license to that Licensee or any transferee, assignee, or successor in interest of that Licensee.

CHAPTER THREE: COVENANTS OF DECLARANT

A. *Common Area Maintenance Standards* Declarant covenants that the Common Areas of the Shopping Center Parcel shall be maintained at all times in good repair, and in safe, sanitary and serviceable condition and free and clear of debris. Common Area maintenance and repair shall include, without limitation, resurfacing, repainting and restriping of the paved areas, cleaning, sweeping and other janitorial services; garbage control; policing and security; planting and landscaping; directional signs and other markers; lighting; utilities serving the Common Area; premiums on public liability insurance allocable to the Common Area; parking management devices and services; other management services allocable to the Common Area; and other expenses reasonably necessary for the maintenance and repair of the Common Area as specified in these CC&R's, as otherwise may be required by plans submitted by Declarant, or as required in the reasonable business judgment of Declarant. Declarant may hire agents including but not limited to a professional property and/or parking management company to perform its duties under these CC&R's and any license hereunder.

B. *Site Plan, Parking and Circulation Plan, & Parking Management Plan* A depiction of Declarant's approved Site Plan and Parking Management Plan applicable to the Common Areas of the Shopping

Center Parcel is attached as **Exhibit "C"** hereto. The Site Plan, including all significant physical structures and improvements are depicted. The Parking Management Plan, including all sidewalks, cross-walks, driveways, roadways, traffic control signs, fire lanes, and parking spaces are also depicted, as well as any applicable parking restrictions (disabled spaces, time-limited spaces, loading zones, etc.). All deliveries shall be made in accordance to the Parking Management Plan. Parking spaces for disabled persons are scattered throughout as required by law. The Common Areas shall not be used for parking and operation of motor homes or recreational vehicles and equipment, nor shall the Common Areas be used for overnight parking except as approved in the Parking Management Plan.

C. *Employee Parking Program* All employees of Licensees shall be encouraged to take public transportation, ride-share, car pool, or bicycle to work. All employees of Licensees who drive to work shall preferably park their vehicles on the public street. If public street parking is not available upon arrival, all employees of Licensees who park on the Shopping Center Parcel must park in the upper lot furthest from Shopping Center and Bowling Alley businesses. Declarant may require Licensees to report the license plate numbers of all employees working on such Licensees' property and may require all employees to affix a decal or other marker on or in their vehicle.

D. *Garbage Plan* Declarant's garbage plan is as follows:

1. Licensee Garbage Bins All Licensees shall be solely responsible for disposing of garbage generated from their own businesses in garbage bins. Said garbage bins shall be located on the respective properties (leased or owned) of Licensees, unless Licensee has obtained the express written consent of Declarant to locate garbage bins at a specific location within the Common Areas. Licensee garbage bins shall be enclosed or covered, kept reasonably free of vermin, and such bins and enclosures shall be bought or constructed at Licensee's own expense.

2. Public Garbage Cans Declarant shall maintain covered garbage cans for incidental public use of customers throughout the Shopping Center Parcel and shall empty such cans on a regular (at least bi-weekly) basis. Declarant may require any Licensee that is reasonably perceived to generate excessive public garbage (*e.g.* a coffee shop that serves beverages in disposable cups) to maintain one or more public garbage cans provided by Declarant for public use in Common Areas on or about the vicinity of the Licensees business or at locations where that business's garbage is commonly found, and to empty said cans upon a regular daily schedule. To minimize vermin, no public cans shall be uncovered.

E. *Enforcement Plan* Declarant covenants to enforce these CC&R's and all plans it submits hereunder that are approved by the City of Daly City. Enforcement shall include requiring Licensees to affirmatively consent to these CC&R's in writing, and may include without limitation such discretionary other remedies as providing warning notices to violators; towing the vehicles of violators in a manner consistent with California law; surcharging Licensees for the cost of security to deter crime reasonably perceived to be associated with the customers of any Licensee; suing Licensees and/or their invitees for damages, indemnity, or subrogation related to torts; requiring Licensees to hire and use valet services, bus services, ride-share services, or off-site parking locations during special events that are anticipated to draw more than a specified number of people; and temporarily suspending repeat-offenders or permanently banishing persistent repeat-offenders from using all or parts of the Common Areas of the Shopping Center Parcel.

F. *Cumulative Remedies* Every remedy provided in these CC&R's shall be cumulative and not exclusive. Failure to exercise any remedy provided for in these CC&R's shall not, under any circumstances, be construed as a waiver of the remedy.

CHAPTER FOUR: LICENSE FEES CONDITIONS

A. *Tenants Obligation to Reimburse Declarant's Cost of Performance* The rent paid by Tenants shall be deemed to include their license fee, and lease provisions related to common area maintenance costs

will be deemed to extend to include the Common Area of the Shopping Center Parcel. However, if not otherwise specified in said leases, and as to all new leases or lease renewals, Tenants shall be obligated to pay the reasonable cost of performance by Declarant of its duties under these CC&R's. The cost of performance includes all matters reasonably arising under or related to these CC&R's and any licenses thereunder, including but not limited to expenses incurred with respect to repair and maintenance, management fees, insurance, and the cost of enforcement including but not limited to attorney's fees. If Declarant manages the Common Area of the Shopping Center Parcel directly the management fee shall be ten percent of expenses incurred. The "cost of performance" shall otherwise be liberally construed in favor of Declarant and deference shall be given to Declarant's reasonable business judgment. As among Tenants, one hundred percent of the cost of performance shall be apportioned as specified in their respective leases.

B. *License Fee of Owner of Bowling Alley Parcel* The owner of the Bowling Alley Parcel shall pay an annual license fee. The minimum license fee shall be $96,000 for base year 2022. Thereafter, the license fee shall be updated annually by multiplying the then existing License Fee by the greater of percentage increase in a) the San Francisco-Oakland-San Jose Consumer Price Index for All Urban Consumers (CPI-U) or b) the Producer Price Index by Commodity: Special Indexes: Construction Materials over the immediately preceding year or c) such other similar index as determined by the Licensor if the preceding indices are not in use at the time; however, said percentage change shall not be lower than zero percent (0%). The annual increase shall be based upon end of calendar year (*i.e.* December) index reports.

C. *Billing & Deadlines*

1. Tenants Declarant shall periodically bill Tenants (monthly, quarterly, or annually). The period shall be determined as specified in the respective leases of the Tenants, if applicable. To the extent possible, Declarant shall use best efforts to bill all Licensees at the same time. The payment deadline of Tenants shall be as stated in their respective leases, if applicable. Otherwise, the payment deadline shall be ten calendar days after delivery of the bill by email, or after the post-mark if delivered by U.S. Mail and simple (non-amortized) interest at the legal rate for contracts shall begin accruing immediately thereafter pursuant to Civil Code section 3287 at the legal rate under Civil Code section 3289 (currently ten percent).

2. Owner of the Bowling Alley The annual license fee of the owner of the Bowling Alley shall be due no later than April 1. Simple (non-amortized) interest at the legal rate for contracts shall begin accruing immediately thereafter pursuant to Civil Code section 3287 at the legal rate under Civil Code section 3289 (currently ten percent). No bill shall be required, but Declarant shall confirm the amount owing within three business days if requested.

3. *Time Is of the Essence* Time is of the essence as to all payment deadlines mentioned in this Chapter.

D. Timely Payment Is a License Condition The consequence to Tenants of non-payment, partial payments, or late payments shall be as stated in their respective leases, if applicable. Otherwise, and in the case of the owner of the Bowling Alley Parcel, timely payment is both a condition and covenant of every license issued under these CC&R's. The failure of a Licensee to make timely payment shall constitute good cause for Declarant to temporarily revoke or permanently terminate said license by delivering notice of the same to Licensee. Any actual waiver under this paragraph on one or more occasions shall never be construed as a permanent waiver or estoppel as to future defaults.

CHAPTER FIVE: DECLARANT'S RESERVED RIGHTS

A. *Declarant Rulemaking* Declarant may make any rules for the benefit of the Common Areas of the

Shopping Center Parcel or that are necessary and proper to carry out these CC&R's, provided that they are not inconsistent with these CC&R's, resolutions, and ordinances. For example, and among other things, all Licensees shall be subject to the following rights and restrictions:

1. The right of Declarant to regulate the use any other facility of the Common Area of the Shopping Center Parcel and to adopt and enforce rules relating thereto.

2. The right of Declarant to adopt and enforce rules on the control and use of any driveways, sidewalks, entryway, and paving areas located on or across the Common Areas, including the right to regulate the kind of motorized or non- motorized vehicles, the speed of vehicles, and the parking of vehicles on such roadways or on the Common Areas. The Declarant is authorized to delegate to a municipality or other governmental entity or to contract with any private security or parking management company or private patrol company to exercise its authorized rights in connection with such private streets, roadways, and parking areas.

3. The right of Declarant to submit a revised Parking Management Plan, or other plans mentioned herein and to adopt said revisions upon approval of the City of Daly City, which may, among other things, limit the timing of parking in the Common Area and impose other rules or restrictions on the use of the Common Area of the Shopping Center Parcel.

4. The right of Declarant to develop and/or redevelop its lands provided that all such development or redevelopment shall comply with all zoning and building codes as have been adopted and approved by the City of Daly City.

B. *Right to Charge Fair Market Value for License Fees* Not more than once every ten years, Declarant reserves the right to update license fees charged to the owner of the Bowling Alley Parcel to the fair market value of the license conveyed by adjusting the base year value.

C. *Declarant's Own Use of Premises* Licensees shall not use their licenses so as to unduly interfere with the reserved rights of Declarant, including but not limited to using the Common Areas of the Shopping Center Parcel itself for ingress, egress, parking, or other purposes. Declarant and its authorized contractors or its agents shall have the right to enter the Common Area to perform its obligations under these CC&R's including obligations of construction, maintenance, or repair for the benefit of the Common Areas, or other areas of the Shopping Center Parcel. Entry and any continuing work on the Common Area shall be made with as little inconvenience as possible to Licensees and any damage caused by such entry, construction, or repair shall be repaired by Declarant. While such construction, maintenance, or repair is ongoing, Declarant may temporarily exclude Licensees, and their respective invitees from the area in which work is ongoing for the safety and security of all.

CHAPTER SIX: LICENSEE RESTRICTIONS AND RETAINED RESPONSIBILITIES

A. *Legal Uses Only* The Common Areas of the Shopping Center Parcel shall be used only for legal purposes and by Licensees operating legal, properly zoned and permitted businesses. No part of the Development shall be used or caused, allowed, or authorized to be used in any way, directly or indirectly, for any business purpose that is otherwise not permitted by the City. For instance, if the City of Daly City shall revoke or terminate a use permit, the rights of such Licensee under these CC&Rs, but not the responsibilities, of said Licensee shall terminate immediately.

B. *Responsibility for Utilities, etc. In Common Areas* Each Licensee shall be responsible for maintaining and repairing the mechanical, air conditioning, plumbing, sewer, electrical, heating, water, gas, cable television, drains and other lines, equipment, systems, and fixtures exclusively serving the Licensee's and/or the Tenant's premises. The Declarant shall be responsible for such services as serve the Common Areas of the Shopping Center Parcel, however the costs associated with such services shall be a cost of performance under Chapter Four above.

C. *Responsibility for Leased or Owned Property* Licensees shall maintain and repair their own property, whether leased or owned, including buildings near or adjacent to the Common Areas of the Shopping Center Parcel, and including any entryways that may extend into the Common Areas. All maintenance and repair work to be performed by Licensees under this paragraph shall be performed in a neat, clean, sanitary, workable, and attractive manner. This paragraph shall not be construed as modifying any obligation of Declarant or a Tenant under any lease between Declarant and that Tenant. Except in cases of emergency, any maintenance and repair that will interfere with the normal use of the Common Area of the Shopping Center Parcel shall be approved and scheduled with Declarant and Declarant may impose commercially reasonable conditions thereon.

D. *Property Damage & Nuisances Restrictions*

1. Damage to Common Areas No Licensee or their invitees or their tenants' invitees, shall injure or damage in any way any portion of the Common Area.

2. Nuisances No noxious or offensive activities which rise to the level of nuisance, including, but not limited to, repair of automobiles or other motorized vehicles, shall be conducted within the Common Areas. Nothing shall be done on or within the Common Area that may be or may become an annoyance or nuisance to the Declarant or Tenants, or that in any way interferes with the quiet enjoyment of the Shopping Center Parcel in such a manner as to rise to the level of nuisance.

3. Violations As Nuisance Every act or omission in violation of the use provisions of these CC&R's, plans approved by the City of Daly City in conformity therewith, or a license thereunder shall constitute a nuisance and, in addition to all other remedies set forth, may be abated or enjoined by Declarant.

CHAPTER SEVEN: INDEMNIFICATION, INSURANCE & SUBROGATION COVENANTS

A. *Indemnification For Negligence or Misconduct* Each Licensee shall be liable to Declarant for any damage to the Common Area or to Shopping Center Parcel that may be sustained by reason of the tortious acts or omissions (including but not limited to the willful misconduct or negligence) of the Licensee or their permitted users, including but not limited to their tenants or sub-tenants, employees, guests, and invitees. Each Licensee agrees to indemnify Declarant, and to hold Declarant harmless from, and to defend Declarant against, any claim for personal injury or property damage by such permitted users. Except that Licensees shall not be responsible to pay any damages against Declarant based solely upon: intentional torts committed by Declarant, grossly negligent acts or omissions by Declarant, or the active negligence of Declarant; nor shall Declarant attempt to pass on any such excepted damages to Licensees as a cost of performance under these CC&R's.

B. *Declarant's Liability Insurance* Declarant may obtain and maintain comprehensive public liability insurance insuring the Declarant against any liability incident to the ownership or management of the Common Area of the Shopping Center Parcel for the purpose of protecting Declarant and such insurance shall be deemed a cost of performance.

C. *Licensee's Liability Insurance* Tenants shall obtain and maintain such insurance as is required under their respective leases. Otherwise, and as to the owner of the Bowling Alley Parcel, Licensees shall procure at their own expense insurance for liability related to their license interests in the Common Areas of the Shopping Center Parcel with liability limits of not less than $1,000,000, and upon request of Declarant shall provide declarations pages and the policies themselves. If obtainable on commercially reasonable terms, Declarant shall cooperate with Licensees obtaining a cross-liability or severability-of-interest clause or endorsements. All insurance of Licensees shall be procured at each respective Licensee's sole expense.

D. *Declarant Has No Obligation to Procure Insurance for Licensees* Declarant shall NOT be obligated to obtain and maintain a master or blanket policy of fire insurance, commercial general liability, or any other form of insurance which would name any Licensee as an insured or additional insured.

E. *Subrogation Rights* Declarant and its insurer shall have a right of subrogation against any Licensee. To the extent insurance of any Licensee covers occurrences arising out of or related to the Common Areas of the Shopping Center Parcel or the Shopping Center Parcel itself, Licensee and its insurer shall have no rights of subrogation against Declarant.

CHAPTER EIGHT: FINANCING PROTECTIONS

A. *Mortgages & Deeds of Trust* Declarant may encumber the Shopping Center Parcel with a Mortgage or Deed of Trust. References herein to Mortgages shall apply likewise to Deeds of Trust, and references to Mortgagees shall apply likewise to Holders of Deeds of Trust.

B. *Subordination of Liens* Any lien created or claimed under these CC&R's is expressly made subject and subordinate to the rights of any first Mortgage that encumbers all or a portion of the Shopping Center Parcel or any part thereof, made in good faith and for value. No such lien shall in any way defeat, invalidate, or impair the obligation or priority of such first Mortgage unless the first Mortgagee expressly subordinates its interest, in writing, to such lien. If the Shopping Center Parcel or any part thereof is encumbered by a first Mortgage made in good faith and for value, the foreclosure of any lien created by any provision in the Declaration for assessments, or installments of assessments, shall not operate to affect or impair the lien of the first Mortgage. On acquisition of title to the Shopping Center Parcel or any part thereof pursuant to the remedies in a Mortgage or pursuant to foreclosure, the first Mortgagee shall not be liable for more than six months of the Shopping Center Parcel regular assessments accrued before acquisition of title by the first Mortgagee plus costs related to collection of the unpaid assessments. The subsequently levied assessments or other charges may include previously unpaid assessments, as long as Declarant, including the foreclosure-purchaser and his/her/its successors and assigns, are required to pay their proportionate share as provided in this Section.

C. *Subordination of these CC&R's and Any Licenses* These CC&R's and any licenses thereunder shall be subordinate to any and all loans, mortgages, deeds of trust, or other financing arrangements made in good faith and fair value, whether presently made, or made in the future, and whether recorded or not.

D. *Mortgage & Mortgagee Definitions* As used in these CC&R's, a "Mortgagee" shall mean either a mortgagee under a "Mortgage" or the beneficiary under a deed of trust and any holder, governmental guarantor, or insurer of a Mortgage. The term "Mortgage" means a recorded mortgage or deed of trust encumbering the Shopping Center Parcel or any part thereof, which is given as security by Declarant for the payment of money. An institutional Mortgagee is a Mortgagee that is a bank, savings and loan association, mortgage company, credit union, or other entity chartered or licensed under federal or state laws whose principal business is lending money on the security of real property or investing in such loans, or any insurance company or pension or profit-sharing trust or any federal or state agency or instrumentality, including, without limitation, the Federal National Mortgage Association, the Federal Home Loan Mortgage Corporation, the Federal Housing Administration and the Veterans Administration, or any purchaser of a Mortgage originated by an institutional Mortgagee.

CHAPTER NINE: DISPUTE RESOLUTION

A. *Judicial Actions* Declarant shall have the power to commence and maintain judicial actions to collect damages and to restrain and enjoin any actual or threatened breach of any provision of these CC&R's, any related plan approved by the City of Daly City, any license under these CC&R's, or for violation of any other rules promulgated by Declarant under these CC&R's or its reserved rights. Licensees agree that damages alone are not an adequate remedy for violations. All complaints seeking

mandatory or prohibitory injunctions must be filed in the Superior Court of California in and for the County of San Mateo or the U.S. District Court for Northern California in San Francisco.

B. *Small Claims Court* All claims for damages equal to or less than the maximum allowed to be awarded in Small Claims Court (currently $5,000 per Code of Civil Procedure §116.220, or $10,000 by a natural person under Code of Civil Procedure § 116.221) shall be commenced in the Small Claims Court Division of the San Mateo County Superior Court.

C. *Arbitration* Any claims for declaratory relief or damages above the Small Claims Court limit shall, at the election of the plaintiff, be arbitrated. The party requesting arbitration shall submit the names of three arbitrators with any request for arbitration. If one of the arbitrators is not mutually selected within three business days, the party requesting arbitration shall initiate a claim with the American Arbitration Association, JAMS San Francisco, ADR, Services, Inc., or by filing a petition to compel arbitration in court. Any arbitrator selected must be a retired judge with significant experience handling commercial real estate disputes. The cost of arbitration shall be split evenly among the parties until an award on the merits is made. Pursuant to Code of Civil Procedure section 1284.2, the arbitrator shall have jurisdiction and discretion to order that the prevailing party be reimbursed by the losing party for the costs and fees paid to the arbitrator.

D. *Attorney's Fees Not Recoverable* These CC&R's shall not be construed as authorizing contractual attorney's fees.

CHAPTER TEN: MODIFICATIONS, REVISIONS, AND TERMINATION

A. *CC&R's Run With the Land* These CC&R's are intended to be binding on Declarant and Declarant's successors and assigns so as to run with the Common Areas of the Shopping Center Parcel.

B. *Termination* These CC&R's shall terminate if and when the City of Daly City by ordinance or resolution declares that CC&R's are no longer required for the Common Area of the Shopping Center Parcel.

C. *Revisions & Modifications* Minor or substantial revisions to these CC&R's or plans required thereunder may be made at the request of Declarant, and shall become binding modifications if approved by the City of Daly City. Such revisions may be requested for any reason, and should be liberally approved to address practical problems encountered by Declarant managing the Common Area of the Shopping Center Parcel. The City of Daly City may approve revisions for an interim period to see whether or not the proposed revisions solve a particular problem. A license under these CC&R's shall not be deemed to be a vested right; rights created by these CC&R's are intended to be in the nature of a mere revocable conditional license to use the Common Areas of the Shopping Center Parcel in compliance with these CC&R's and with the understanding that such CC&R's may be modified by the City of Daly City upon the consensual request of the Declarant.

D. *Maintenance of Documents* These CC&R's and all modifications thereto shall be recorded in the Official Records of San Mateo County with a copy filed with the City Clerk and maintained by the Planning Department. The original copies of such instruments shall be maintained by Declarant. Plans approved by the City of Daly City under these CC&R's shall be maintained by the Planning Department, and may at the election of Declarant be attached as exhibits to these CC&R's or any modifications thereto. Copies of all such documentation shall be available for inspection by the public at the Planning Department.

CHAPTER ELEVEN: NOTICES

A. *Notices* Any and all communications required or permitted to be given by the Declarant shall be deemed to be duly made immediately upon delivery by electronic mail, or within three days if delivery by US Mail. Mailing addresses may be changed at any time on written notification to the Declarant. Notices shall be deemed received 48 hours after mailing if mailed to the transferee, by certified mail, return receipt requested, at the following mailing address: 1534 Plaza Lane, Suite 326 Burlingame, CA 94010.

Signature page follows.

IN WITNESS WHEREOF this Declaration is hereby executed as authorized by the Owners of the respective Parcels:

KPC, LLC:

King Plaza Center, LLC, a Delaware limited liability company
Its sole Member

By: 950 King Drive, LLC, a Delaware limited liability company, its sole member

By: _____

Wai Man Ho, Co-Trustee of the Ho Family Trust dated July 1, 1993 Its Sole Member

By: _____

Tammy Ho, Co-Trustee of the Ho Family Trust dated July 1, 1993 Its Sole Member

EXHIBIT A

PROPERTY DESCRIPTION
SHOPPING CENTER PARCEL
APN 091-175-220

The land referred to is situated in the County of San Mateo, City of Daly City, State of California, and is described as follows:

Being portions of Block 7, as shown on that certain Map entitled "Serramonte, Unit No. 1, Daly City, San Mateo County, California", recorded Jun 17, 1965, in Book 62 of Maps, at Pages 29 to 31, inclusive, in the Office of the County Recorder of the County of San Mateo, and more particularly described as follows:

Beginning at the Westerly end of the 15 Foot radius curve connecting to the Southerly line of Warwick Street with the Westerly line of Shipley Avenue as shown on the Map referenced above; thence Easterly and Southerly along the Westerly line of Shipley Avenue on a curve to the right from a tangent which bears North 87° 30' 00" East, with a radius of 15 Feet, through a central angle of 90°, an arc distance of 23.56 Feet; thence South 2° 30' 00" East 160.84 Feet; thence leaving said Westerly line of Shipley Avenue South 87° 30' 00" West 49.78 Feet; thence South 2° 30' 00" East 6.10 Feet; thence South 87° 30' 00" West 58.10 Feet; thence North 2° 30' 00" West 4.50 Feet; thence South 87° 30' 00" West 5.30 Feet; thence North 2° 30' 00" West 15.50 Feet; thence South 87° 30' 00" West 7.30 Feet; thence South 2° 30' 00" East 15.50 Feet; thence South 87° 30' 00" West 4.40 Feet; thence South 2° 30' 00" East 4.50 Feet; thence South 87° 30' 00" West 28.00 Feet; thence South 2° 30' 00" East 392.04 Feet to a point on the Northerly line of King Drive; thence Westerly, Northerly and Easterly along the Northerly line of King Drive, the Easterly line of Callan Boulevard and Southerly line of Warwick Street on a curve to left from a tangent which bears North 84° 56' 55" West, with a radius of 660 Feet, through a central angle of 18° 42' 01", an arc distance of 221.94 Feet; thence on a tangent curve to the right with a radius of 30 Feet; through a central angle of 85° 27' 34", an arc distance of 44.75 Feet; thence on a tangent curve to the right with a radius of 710 Feet, through a central angle of 15° 41' 22", an arc distance of 194.42 Feet; thence North 2° 30' 00" West 337.60 Feet; thence on a tangent curve to the right with a radius of 30 Feet, through a central angle of 90°, an arc distance of 47.12 Feet; thence North 87° 30' 00" East 389.86 Feet to the point of beginning.

APN 091-175-220

JPN 091-017-175-15A
091-017-175-18A
091-017-175-19A

Exhibit B

PROPERTY DESCRIPTION
BOWLING ALLEY PARCEL
APN 091-175-200

The land referred to is described as follows: Land situated in the City of Daly City, County of San Mateo, State of California, described as follows:

BEING PORTIONS OF BLOCK 7, AS SHOWN ON THAT CERTAIN MAP ENTITLED "SERRAMONTE, UNIT NO. 1, DALY CITY, SAN MATEO COUNTY, CALIFORNIA", RECORDED JUNE 17, 1965, IN BOOK 62 OF MAPS, AT PAGES 29 TO 31, INCLUSIVE, IN THE OFFICE OF THE COUNTY RECORDER OF THE COUNTY OF SAN MATEO, AND MORE PARTICULARLY DESCRIBED AS FOLLOWS:

COMMENCING AT THE WESTERLY END OF THE 15 FOOT RADIUS CURVE CONNECTING THE SOUTHERLY LINE OF WARWICK STREET WITH THE WESTERLY LINE OF SHIPLEY AVENUE AS SHOWN ON THE MAP REFERENCED ABOVE; THENCE EASTERLY AND SOUTHERLY ALONG THE WESTERLY LINE OF SHIPLEY AVENUE ON A CURVE TO THE RIGHT FROM A TANGENT WHICH BEARS N 87° 30' 00" E, WITH A RADIUS OF 15 FEET, THROUGH A CENTRAL ANGLE OF 90°, AN ARC DISTANCE OF 23.56 FEET; THENCE S 2° 30' 00" E 160.84 FEET TO THE TRUE POINT OF BEGINNING; THENCE ALONG SAID WESTERLY LINE OF SHIPLEY AVENUE AND THE NORTHERLY LINE OF KING DRIVE S. 2° 30' 00" E 292.68 FEET; THENCE ON A TANGENT CURVE TO THE RIGHT WITH A RADIUS OF 470 FEET; THROUGH A CENTRAL ANGLE OF 12° 57' 10", AN ARC DISTANCE OF 106.25 FEET; THENCE ON A TANGENT CURVE TO RIGHT WITH A RADIUS OF 30 FEET, THROUGH A CENTRAL ANGLE OF 93° 29' 46", AN ARC DISTANCE OF 48.95 FEET; THENCE ON A TANGENT CURVE TO THE LEFT WITH A RADIUS OF 680 FEET; THROUGH A CENTRAL ANGLE OF 08° 53' 51", AN ARC DISTANCE OF 105.60 FEET; THENCE LEAVING THE NORTHERLY LINE OF KING DRIVE AND PROCEEDING N 2° 30' 00" W 392.04 FEET; THENCE N 87° 30' 00" E 28.00 FEET; THENCE N 2° 30' 00" W 4.50 FEET; THENCE N 87° 30' 00" E 4.40 FEET; THENCE N 2° 30' 00" W 15.50 FEET; THENCE N 87° 30' 00" E 7.30 FEET; THENCE S 2° 30' 00" E 15.50 FEET; THENCE N 87° 30' 00" E 5.30 FEET; THENCE S 2° 30' 00" E 4.50 FEET; THENCE N 87° 30' 00" E 58.10 FEET; THENCE N 2° 30' 00" W 6.10 FEET; THENCE N 87° 30' 00" E 49.78 FEET TO THE TRUE POINT OF BEGINNING.

PROPERTY ADDRESS: 900 KING PLAZA, DALY CITY CA 94015

APN: 091-175-200

EXHIBIT C

SITE PLAN AND PARKING MANAGEMENT PLAN

PARKING MANAGEMENT PLAN
KING PLAZA SHOPPING CENTER

This proposal allows for shared parking for patrons in Parcels A, A-1, and B.
Patrons and employees of the tenants of Parcel B shall use the Common Area of the Shopping Center in accordance to the terms of the King Plaza Shopping Center 2022 Declaration of Covenants, Conditions, and Restrictions ("these CC&Rs") provided that conditions under these CC&Rs have been met.

This proposal provides 159 unlimited parking spaces, 54 one-hour parking spaces, 93 two-hour parking spaces, 3 twenty minute parking spaces, 8 ADA parking spaces, and 9 loading and unloading parking spaces in the upper lot.

Total on-site vehicle parking spaces provided: 326
Total Required by Ordinance No. 1255: 302

Specific Parking Space Plan (See attached map.):

Section A, B, C (54 spaces) one hour parking, seven days a week, except for 8 ADA, which are unlimited time parking. Note: This is a continuation of the one hour spaces from the initial plan submitted in 1998 by the prior owner. Note: The number of ADA spaces was determined by an ADA consultant.

Section D: (93 spaces) two hour parking, seven days a week.

Section E "Upper Corner Lot" at King Drive and Callan Boulevard (9 spaces) reserved for loading and unloading of delivery vehicles (defined as trucks with 6 axles or more), seven days a week, 7:00am-1:00pm. Manila Oriental Market delivery truck parking: This truck may be parked in the Upper Corner Lot at all hours, on all days, but must be parked in loading and unloading zone space in a manner that does not impede traffic flow. (53 spaces) unlimited parking.

Section E: (106 spaces) unlimited time parking, of which a majority are closest to Classic Bowling.

Section F: Parallel parking (3 spaces) 20 minute time parking, seven days a week, in front of 980 King building closest to King Drive.

Street Parking: (80 spaces) surrounding the Center for employees of both Classic Bowling and King Plaza tenants which are presently unlimited time parking, that are available to employees.

Delivery trucks serving the tenant of Parcel B shall be parked wholly on Parcel B or on the adjacent public street when loading/unloading so as not to impede access to parking and/or the driveways in and to the Common Areas. The times and days for such deliveries shall be under the control of the tenant of Parcel B otherwise.

Large Scale Event Evening Parking: Businesses holding large scale evening events of 200 or more shall provide notice to the Declarant at least seven days prior to the event. Based on the amount of notices

received for that day, the Declarant may determine that such business shall comply with congestion management requirements to provide, at the expense of said business, for valet parking, or require bus, vanpool, or carpool arrangements for their customers.

Employee Parking:
The Declarant shall consult with the San Mateo County Congestion Management Agency on ways to reduce employee parking requirements through use of transportation demand management ("TDM"). Should the Declarant develop a TDM program, Shopping Center tenants and Parcel B tenants will be instructed about the TDM Program, and asked to comply with it.

Employees working at King Plaza Center shall park in the "Upper Corner Lot" at King Drive and Callan Boulevard or on the street in the perimeter parking surrounding the shopping center. Tenants will be required to instruct their employees to refrain from parking in surrounding residential neighborhoods. The owners of the tenants of Parcel B will be asked to instruct their employees to also park in the Upper Corner Lot or on the street in the perimeter parking surround the shopping center, and to refrain from parking in surrounding residential neighborhoods.

Enforcement Issues:
Time limited parking will be enforced by Declarant or its successor-in-interest.

All of the tenants in the King Plaza Center and the tenants of Parcel B will be notified of parking limits, the fact that parking limits will be enforced, and that vehicles will betowed if they do not comply. The Declarant will post signage regarding parking enforcement and towing as required by law.

Attachment: King Plaza Center – Parking Lot Management Plan/Site Plan

KING PLAZA CENTER - PARKING LOT MANAGEMENT PLAN

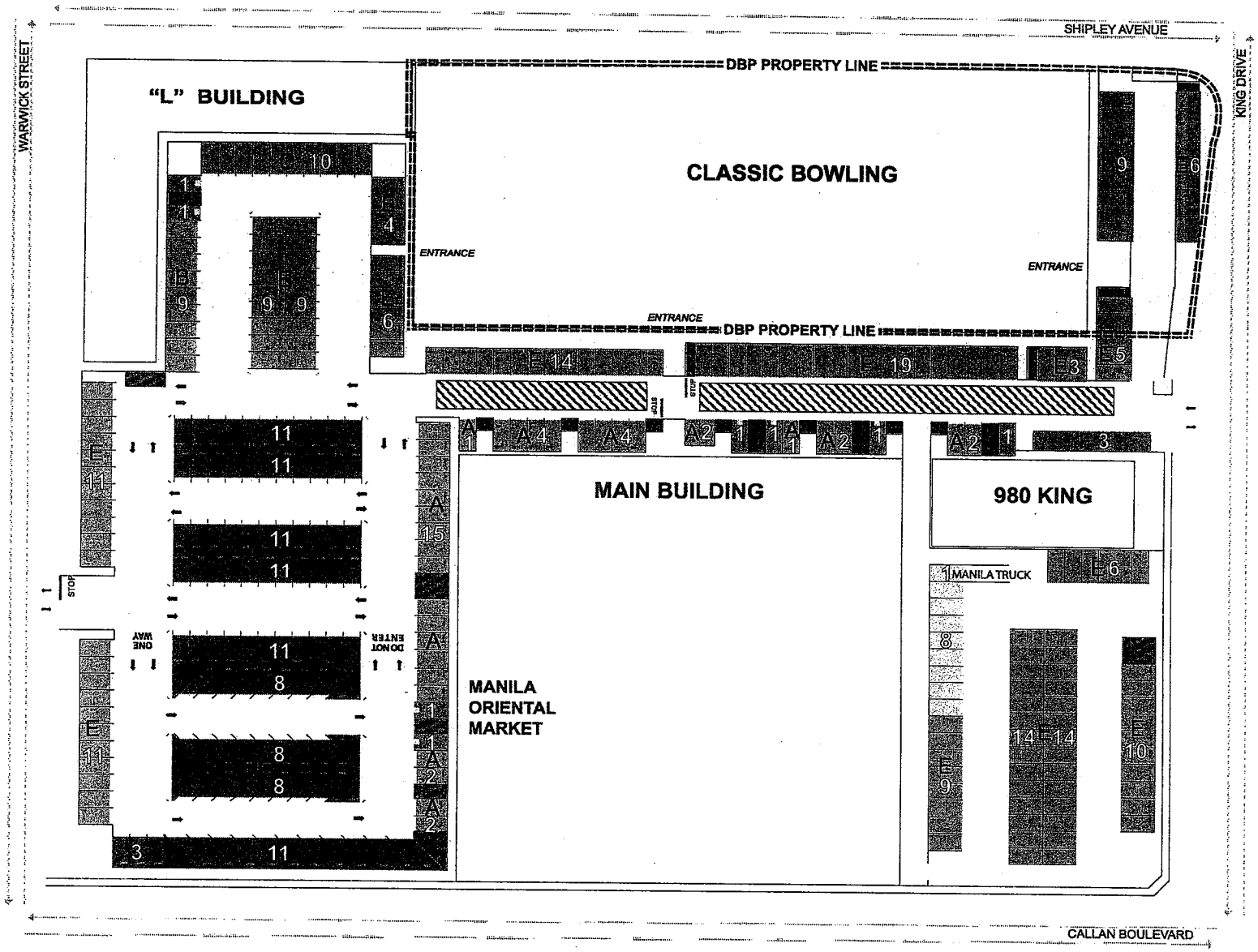

LEGEND

ON SITE

	Time Limit	Number of Spaces
ADA	No Limit	8
* A, B, C	1 Hour	54
D	2 Hour Limit	93
E	No Limit	159
** F	20 Minute Limit	3
Loading Zone	8 spaces +1 Manila Truck space	9

* 1 Hour Parking.

** Three 20 minute limit, plus one ADA, as required by Daly City Building Inspector.

No Loading

TOTAL SPACES ON SITE: 326

Note: All ADA spaces have been relocated from the perimeter of the bowling building, allowing more standard parking spaces.

Revision Number: A	Property Address: King Plaza, 900 King Drive, 950-980 King Drive, Daly City, Ca 94015	Project Title: **Proposed New Parking Map Plan**	Owner Information: King Plaza Center, LLC, 1534 Plaza Lane, Suite 326, Burlingame, Ca 94010	Page: 1 - 1
Revision Date: 11.15.2021				

EXHIBIT C

The Reciprocal Easement

In addition to the rights and protections for the Classic Bowling parcel under the 1998 Development Standards, DBP has enforceable rights under a reciprocal easement.

As noted in the history in Exhibit A, the City was reluctant to authorize subdivision of the three parcels and divided ownership because of a concern over how shared parking could be enforced. To resolve that issue, the owners at the time, Litke and DBP, entered into a reciprocal easement. The transfer of title to the properties was conditioned upon execution of the easement. See, Reciprocal Easement, p.2.

The easement guarantees mutual, nonexclusive parking rights across the three parcels. It also provides that maintenance costs would be shared equally. Further, it expressly provides that no fee could be charged for the use of the shared parking.

The easement agreement was signed and notarized by all owners at the time. Litke was supposed to record it, and he says that he gave it to his title company, but it never made it into the County records.

But that does not mean that the easement is not enforceable. Under California law, a written easement is enforceable against everyone who signs it and against future owners if they are made aware of it before title is taken. California Civil Code Section 1217 states clearly: "An unrecorded easement is valid as between the parties and those who have notice thereof."

Here, Litke informed the Ho family of the existence of the reciprocal easement. Ms. Tammy Ho signed a statement acknowledging the easement before escrow closed on the sale of the Shopping Center parcels. Accordingly, the King Plaza parcel owners are bound by the easement.

And the parties have been performing under the terms of the easement since the Hos acquired the Shopping Center parcels in 2007. DBP has paid 50% of the maintenance and improvement costs for the shared parking and common areas, over $700,000 since the easement went into effect.

The easement guarantees equal access to parking. It does not allow one side to limit the other side's use. It also prohibits one side from charging a fee for the shared parking.

No one expects the Planning Commission to make legal rulings about the enforceability of easements. That is for the courts, and that is why there is litigation between DBP and the King Plaza ownership. But the Commission should be very cautious when considering a parking plan that is not consistent with vested, enforceable private rights.

When evaluating the requested parking plan, CC&Rs, and zoning amendment, the Commission should ask the applicant and staff:

1. Did the Ho family take title to the Shopping Center parcels with knowledge of the existence of the reciprocal easement?

2. Is the reciprocal easement enforceable even if it is not recorded?

3. Can the City approve a parking plan and CC&Rs that are not consistent with the rights of DBP under the reciprocal easement? Are there constitutional limits on what a city can do to alter existing contractual rights?

4. Should the City defer action until after the court case between the parties is concluded?

Attachments: Executed Reciprocal Easement Agreement

RECORDING REQUESTED BY, AND
WHEN RECORDED MAIL TO:

KAY LOWREY
FIDELITY NATIONAL TITLE COMPANY
50 CALIFORNIA STREET #2950
SAN FRANCISCO, CA. 94111

ESCROW NO. 995052

SPACE ABOVE LINE FOR RECORDER'S USE

APN: 091-175-150 901-175-180 091-175-190

RECIPROCAL EASEMENT AND OPERATION AGREEMENT

This Reciprocal Easement and Operation Agreement is entered into January 11, 1997, to be effective on the date it is recorded in the official records of San Mateo County, by and between DBP INVESTMENTS, a California General Partnership ("DBP"), consisting of Richard A. Bocci, Debra L. Bocci, Mark L. Pender, Mary V. Pender, Robert C. DeVincenzi, Steven DeVincenzi and Janice DeVincenzi, and KING PLAZA PARTNERS, a California general partnership ("KPP"), consisting of Litke Properties, Inc., a California corporation and Mark Litke, as trustee of the Mark Harlan Litke Trust.

RECITALS:

DBP and KPP are the owners of that certain real property located in Daly City, San Mateo County, State of California, more particularly described as Lots A and B, as shown on that certain subdivision map (the "Map"), recorded in Book _____, at Page _____, Official Records

of the San Mateo County, State of California. Concurrently herewith, DBP and KPP have conveyed Parcel A, as shown on the Map, to DBP (the "DBP Parcel"), and Parcel B, as shown on the Map, to KPP (the "KPP Parcel"). The DBP Parcel and the KPP Parcel are sometimes referred to collectively as the "Shopping Center".

DBP and KPP desire to grant to each other mutual and reciprocal easements over their respective parcels for purposes of providing common parking, ingress and egress to each others' parcel and utility service, and to set forth their agreement with respect to the maintenance, repair and operation of certain improvements thereon. The conveyances of Lot A to DBP and Lot B to KPP are subject to the terms and conditions of this Agreement.

NOW, THEREFORE, for and in consideration of the mutual covenants contained herein and for other valuable consideration, receipt of which is hereby acknowledged, the parties hereto agree as follows:

1. Definitions.

(a) The term "DBP Common Area" shall mean all public and common facilities erected on the DBP Parcel intended for common use, including, but not limited to, entrances, exits, driveways, access roads, parking areas, sidewalks, service drives, directional signs, lighting facilities (excluding lighting attached to buildings constructed on the DBP Parcel), utility services, drainage facilities, landscaped areas (provided such landscaped areas are located inside, about or are adjacent to driveways, sidewalks or parking areas intended for common use), and other facilities and areas intended for common use, as the same may exist from time to time in or on the DBP Parcel, but not including any buildings constructed on the DBP Parcel and refuse receptacles located on the DBP Parcel intended for use solely

by DBP and its tenants. Landscaping located within the DBP Parcel and not inside, about or are adjacent to driveways, sidewalks or parking areas intended for common use shall not constitute part of the DBP Common Area, and shall be the sole responsibility of DBP, subject to paragraph 6.

(b) The term "KPP Common Area" shall mean all public and common facilities erected on the KPP Parcel intended for common use, including, but not limited to, entrances, exits, driveways, access roads, parking areas, sidewalks, service drives, directional signs, lighting facilities (excluding lighting attached to buildings constructed on the KPP Parcel other than lighting attached to the dental building located on the KPP Parcel specifically intended for illumination of the upper parking lot), utility services, drainage facilities, landscaped areas (provided such landscaped areas are located inside, about or are adjacent to driveways, sidewalks or parking areas intended for common use), and other facilities and areas intended for common use, as the same may exist from time to time in or on the KPP Parcel, but not including any buildings constructed on the KPP Parcel and refuse receptacles located on the KPP Parcel intended for use solely by KPP and its tenants. Landscaping located within the KPP Parcel and not inside, about or are adjacent to driveways, sidewalks or parking areas intended for common use shall not constitute part of the KPP Common Area, and shall be the sole responsibility of KPP, subject to paragraph 6.

(c) The term "Permitted Users" shall mean DBP and KPP, their heirs, executors, administrators, assigns, and their partners, tenants, sub-tenants, concessionaires, and their clients, customers, visitors, licensees, invitees and guests, and such service and emergency vehicles

and personnel as shall be necessary or appropriate.

2. Grant of Easements by DBP. DBP hereby grants to KPP non-exclusive easements, appurtenant to the KPP Parcel, as follows:

(a) Utility Easement. A non-exclusive easement and right to use, maintain and repair any utility lines which are within the DBP Common Area and which serve the KPP Parcel either exclusively or together with the DBP Parcel.

(b) Easement for Ingress and Egress. A non-exclusive easement and right to use the entrances, exits and driveways within the DBP Common Area for the purpose of ingress and egress.

(c) Parking Easement. A non-exclusive easement and right to use the parking spaces located within the DBP Common Area for parking; provided, however, that so long as any such parking spaces are reserved for the use of official vehicles, such as police cars, the easement and right to use herein granted shall not include such reserved parking spaces.

3. Grant of Easements by KPP. KPP hereby grants to DBP non-exclusive easements, appurtenant to the DBP Parcel, as follows:

(a) Utility Easement. A non-exclusive easement and right to use, maintain and repair any utility lines which are within the KPP Common Area and serve the DBP Parcel, either exclusively or together with the KPP Parcel.

(b) Easement for Ingress and Egress. A non-exclusive easement and right to use the entrances, exits and driveways within the KPP Common Area for the purpose of ingress and egress.

(c) Easement for Parking. A non-exclusive easement and right to use the parking spaces located within the KPP Common Area for the parking; provided, however, that so long as any such parking spaces are

reserved for the use of official vehicles, such as police cars, the easement and right to use herein granted shall not include such reserved parking spaces.

4. Permitted Use of Easements. The easements herein granted shall be used by and for the benefit and use, in common with others, of Permitted Users, in connection with the lawful use of the DBP Parcel and the KPP Parcel and the activities conducted thereon. Neither party shall charge the other party, or any person claiming under such party, for the exercise of any rights granted under paragraphs 2 and 3. Each party agrees that it shall exercise its rights so as to not interfere with the lawful use of the other's Parcel and the activities conducted thereon, and specifically agrees that it shall not:

(a) construct any permanent improvements on or within the Common Area owned by it, except as specifically permitted hereby;

(b) obstruct or impede vehicular or pedestrian traffic upon or across the parking areas, entrances, exits, driveways, walks or service drives located within the Common Area owned by it; or

(c) prevent or impair the others free use of the Common Area owned by it for the free flow of vehicular or pedestrian ingress to and egress from such other owner's Parcel.

5. Construction of Additional Improvements. Notwithstanding the rights granted in this Agreement, either party shall have the right to construct additional buildings or to expand the existing buildings located on the Parcel owned by such party, provided that (i) such construction is in compliance with the minimum general requirements for parking established by Daly City for the Shopping Center and with any specific parking requirements imposed by Daly City in connection with such construction, (ii) Daly City has specifically approved any

reduction in the number of parking spaces available for use by Permitted Users of both the DBP Parcel and the KPP Parcel, (iii) any utility lines that exclusively serve the other party's Parcel are not disturbed or have been relocated at the sole expense of the constructing party; and (iv) adequate ingress and egress to the other Parcel are provided.

6. Maintenance and Payment of Maintenance Costs and Expenses.

(a) Maintenance and repair of the DBP Common Area and the KPP Common Area shall be performed by DBP and KPP on a rotating basis. KPP shall maintain and repair the DBP Common Area and the KPP Common Area for the balance of the 1996 calendar year; DBP shall provide such services for the 1997 calendar year; and an annual rotation shall continue thereafter, subject to change by mutual agreement. Unless otherwise agreed, the party who has not provided such services for any calendar year shall have the right to provide them for the following year. The DBP Common Area and the KPP Area shall be maintained and repaired so that each Common Area is at all times in good repair, and in safe, sightly and serviceable condition, free and clear of debris. Maintenance and repair shall include, without limitation, resurfacing, repainting and restriping; cleaning, sweeping and other janitorial services; policing and security; purchase, construction and maintenance of refuse receptacles intended for public use (provided that each party shall have the exclusive right to use, and shall be solely responsible for the purchase, construction and maintenance of, refuse receptacles located on their respective Parcels and intended solely for use by such party and its tenants); planting and landscaping; directional signs and other markers; lighting and other utilities; premiums on public liability insurance allocable to the Common Area (as set forth in

paragraph 7), and other acts reasonably necessary for the maintenance and repair of the Common Areas.

(b) DBP and KPP agree that every six months (or such longer period mutually agreed to) they shall meet and determine in good faith the nature, level and quality of the maintenance and repair that will be performed in the subsequent (6) month period (or such longer period mutually agreed to), and to establish a budget for such maintenance and repair, setting forth the anticipated costs of the maintenance and repair ("Common Area Costs") of the DBP Common Area and the KPP Common Area during such period. Common Area Costs do not include the cost of lighting attached to the buildings located on the Parcels, except that the use and maintenance costs of lighting attached to the dental building located on the KPP Parcel specifically intended for illumination of the upper parking lot shall be allocated to Common Area Costs on the basis of reliable data on which such allocation can be based. In addition, DBP and KPP may agree that, at the sole expense of the owner of the Parcel, the party performing maintenance and repair shall also maintain and repair portions of the DBP Parcel and/or the KPP Parcel other than the Common Areas, such as landscaping located within either Parcel and not inside, about or are adjacent to driveways, sidewalks or parking areas intended for common use. DBP and KPP acknowledge that they have met and established the nature and level of, and a budget, for maintenance and repair for the balance of the 1996 calendar year.

(c) Each party shall be responsible for fifty percent (50%) of Common Area Costs, and for one hundred percent (100%) of any agreed to maintenance and repair by the maintaining party of portions of such party's Parcel other than the Common Area. The non-maintaining party

shall pay to the maintaining party the non-maintaining party's share of costs (as set forth in the preceding sentence) paid by the maintaining party within ten (10) days of receiving a written notification from the maintaining party of the amount of such costs, together with copies of reasonable documentation of payment thereof. All payments to be made by either party to the other under this Agreement shall be made by a separate check, and shall not be combined with any other payments being made by one party to the other that are unrelated to this Agreement.

(d) Any disputes over the nature, level or quality of maintenance and repair provided by the maintaining party, or over the amount or allocation of any Common Area Costs shall be resolved as provided in paragraph 14. Disputes over the appropriate level or quality of maintenance and repair shall be resolved, in cases of doubt, in favor of a level that is in the best interests of the Shopping Center as a whole.

(e) KPP shall be solely responsible, at its expense, for the repair and maintenance of all utility lines that provide service exclusively to the KPP Parcel, whether such lines are located on the KPP Parcel or the DBP Parcel. DBP shall be solely responsible, at its expense, for the repair and maintenance of all utility lines that provide service exclusively to the DBP Parcel, whether such lines are located on the DBP Parcel or the KPP Parcel. Any maintenance or repair of utility lines performed by either party on the other's Parcel shall be performed in a manner so as not to unreasonably interfere with the operation and use of such parcel. Each party shall maintain and repair the utility lines located on their respective Parcels that provide service to both Parcels, and the costs of such maintenance and repair

shall be shared and paid for by the parties as Common Area Costs as provided in this paragraph 6.

7. Insurance.

(a) Each party shall at all times maintain comprehensive general liability insurance, including both bodily injury and property damage, covering the Parcel owned by such party with a minimum combined single limit coverage of One Million Dollars ($1,000,000.00). In addition, such insurance shall extend to any liability arising out of the indemnity set forth in paragraph 9 below. Each party shall deliver to the other certificates of such insurance upon issuance thereof, and thereafter not less than fifteen (15) days prior to the expiration date of the expiring policies. Any policy maintained by a party as required by this paragraph shall proved that it shall not be cancelled or materially amended without at least thirty (30) days notice to the other party.

(b) To the extent available, such comprehensive public liability insurance shall insure the Common Area separate from the buildings located on each Parcel, and each party shall be solely responsible, at its own expense, for comprehensive liability insurance covering such buildings. In the event separate insurance is not available, the parties shall agree on an allocation of the premiums between the Common Area and the buildings for use in the preparation of the budget referred to in paragraph 6.

(c) In addition, each party shall maintain, at its sole expense, fire and casualty insurance, with extended coverage endorsement and coverage against vandalism and malicious mischief, for the full replacement cost of the improvements located on the Parcel owned by such party.

8. Taxes. Neither party shall have the obligation to pay any taxes, assessments or other governmental charges or fees levied or imposed on the Parcel owned by the other party or the improvements located thereon, which shall be the sole responsibility of the party owning the Parcel.

9. Indemnification.

(a) DBP shall indemnify, defend and hold KPP harmless from and against all loss, liability, claims, costs, expenses, damages and lawsuits, including reasonable attorney's fees and other costs and expenses, arising out of or in any way connected with the exercise by DBP, or an Permitted User claiming through DBP, or the rights granted to DBP by this Agreement, unless arising from the negligence or intentional acts or omissions of KPP or any Permitted User claiming through KPP.

(b) KPP shall indemnify, defend and hold DBP harmless from and against all loss, liability, claims, costs, expenses, damages and lawsuits, including reasonable attorney's fees and other costs and expenses, arising out of or in any way connected with the exercise by KPP, or an Permitted User claiming through KPP, of the rights granted to KPP by this Agreement, unless arising from the negligence or intentional acts or omissions of DBP or any Permitted User claiming through DBP.

10. Entirety of Agreement, Amendment. This Agreement constitutes the entire agreement and understanding of the parties with respect to the subject matter of this Agreement. This Agreement may be amended only in writing, executed by the parties hereto.

11. Not a Public Dedication. Nothing herein contained shall be deemed to be a gift or dedication of any portion of any Parcel to the

general public or for the general public, it being the intention and understanding of the parties that the rights granted herein shall be limited to and for the purposes herein specified.

12. Transferability; Covenants Running With the Land. DBP and KPP shall have the right to transfer the rights granted under this Agreement only in connection with the transfer of the Parcel owned by such party. Subject to the foregoing, the covenants and agreements contained in this Agreement shall run with the land and be binding on and inure to the benefit of the parties hereto, their respective heirs, successors, assigns, representatives, lessees and all other persons acquiring all or any portion of the Parcels, or any improvements thereon, or any interest therein, whether by operation of law or in any manner whatsoever.

13. Notices. Whenever either party shall desire to give or serve upon the other any notice, demand, request or other communication, each notice, demand, request or other communication shall be in writing and shall be given or served personally or by certified or registered mail, postage prepaid, at the address following each party's signature. All mailed notices shall be considered received twenty-four (24) hours after the date stamped by the post office. If any party desires to change the address to which notices, demands, requests or other communications are to be delivered to it, such party shall give notice of such change in the manner provided herein.

14. Dispute Resolution. (a) Before initiating any formal arbitration proceeding under subparagraph (b), a party shall first make a good faith attempt to obtain agreement on an informal arbitration or mediation procedure that is likely to be efficient, cost-effective and suitable for resolution of the particular dispute, controversy or

claim, including agreement on the selection of the arbitrator or mediator, the scope of the proceeding and particular procedures that will apply. In absence of such agreement after making such good faith effort, or in the event such informal arbitration or mediation procedure is unsuccessful, either party may initiate arbitration proceedings as provided in subparagraph (b).

(b) Following compliance with paragraph (a), any dispute, controversy or claim in law or equity arising out of this Agreement or any resulting transaction shall be decided by neutral binding arbitration in accordance with the rules of the American Arbitration Association, and not by court action except as provided by California law for judicial review of arbitration proceedings. Judgement upon the award rendered by the arbitrator(s) may be entered in any court having jurisdiction thereof. The parties shall have the right to discovery in accordance with California Code of Civil Procedure § 1283.05. The filing of a judicial action to enable the recording of a notice of pending action, for order of attachment, receivership, injunction, or other provisional remedies, shall not constitute a waive of the right to arbitration under this paragraph.

"NOTICE: BY INITIALLING IN THE SPACE BELOW, YOU ARE AGREEING TO HAVE ANY DISPUTE ARISING OUT OF THE MATTERS INCLUDED IN THE 'ARBITRATION OF DISPUTES' PROVISION OF THIS AGREEMENT DECIDED BY NEUTRAL ARBITRATION AS PROVIDED BY CALIFORNIA LAW, AND YOU ARE GIVING UP ANY RIGHTS YOU MIGHT POSSESS TO HAVE THE DISPUTE LITIGATED IN A COURT OR JURY TRIAL. BY INITIALLING IN THE SPACE BELOW, YOU ARE GIVING UP YOUR JUDICIAL RIGHTS TO DISCOVERY AND APPEAL, UNLESS SUCH RIGHTS ARE SPECIFICALLY INCLUDED IN THE 'ARBITRATION OF DISPUTES' PROVISION. IF YOU REFUSE TO SUBMIT TO ARBITRATION AFTER AGREEING TO THIS PROVISION, YOU MAY BE

COMPELLED TO ARBITRATE UNDER THE AUTHORITY OF THE CALIFORNIA CODE OF CIVIL PROCEDURE. YOUR AGREEMENT TO THIS ARBITRATION PROVISION IS VOLUNTARY."

DBP's Initials: _____ _____ _____ _____

_____ _____ _____ _____

KPP's Initials: _____ _____

15. Due Cooperation. The parties agree to cooperate with each other in good faith and to perform any further acts that may be reasonably required to effectuate the purposes of this Agreement. In the event an issue or dispute arises that is not specifically addressed by this Agreement, it is the intent of the parties that such issue or dispute shall be resolved in accordance with equitable principles in light of the purposes of this Agreement and the best interests of both Parcels.

16. Miscellaneous. In the event that any provision (or provisions) of this Agreement is, or hereinafter is, adjudged to be, for any reason, unenforceable or invalid, it is the specific intent of the parties hereto that the remainder hereof shall subsist and remain in full force and effect. Time is of the essence for the performance of each and every covenant and the satisfaction of each and every condition contained in this Agreement. The headings contained in this Agreement are for the purpose of reference only, and shall not be considered in the construction or interpretation of any provision hereof. This Agreement may be executed in any number of counterparts, each of which is an original, but all of which constitute one agreement.

COMPELLED TO ARBITRATE UNDER THE AUTHORITY OF THE CALIFORNIA CODE OF CIVIL PROCEDURE. YOUR AGREEMENT TO THIS ARBITRATION PROVISION IS VOLUNTARY."

DBP's Initials: _____ _____ _____ _____

_____ MP MVS.

KPP's Initials: JK MMK

15. Due Cooperation. The parties agree to cooperate with each other in good faith and to perform any further acts that may be reasonably required to effectuate the purposes of this Agreement. In the event an issue or dispute arises that is not specifically addressed by this Agreement, it is the intent of the parties that such issue or dispute shall be resolved in accordance with equitable principles in light of the purposes of this Agreement and the best interests of both Parcels.

16. Miscellaneous. In the event that any provision (or provisions) of this Agreement is, or hereinafter is, adjudged to be, for any reason, unenforceable or invalid, it is the specific intent of the parties hereto that the remainder hereof shall subsist and remain in full force and effect. Time is of the essence for the performance of each and every covenant and the satisfaction of each and every condition contained in this Agreement. The headings contained in this Agreement are for the purpose of reference only, and shall not be considered in the construction or interpretation of any provision hereof. This Agreement may be executed in any number of counterparts, each of which is an original, but all of which constitute one agreement.

IN WITNESS WHEREOF, the parties have executed this Agreement with an intent to be bound hereby as of the date this Agreement is recorded.

DOCUMENT SIGNED IN COUNTERPART

DBP:

DBP INVESTMENTS, a California general partnership

_____
Richard A. Bocci, general partner

_____
Debra Bocci, general partner

_____
Mark L. Pender, general partner

_____
Mary V. Pender, general partner

_____
Robert C. DeVincenzi, general partner

_____
Steven DeVincenzi, general partner

_____
Janice DeVincenzi, general partner

Address for notices:

DBP Investments
c/o Audrey K. Bell, C.P.A.
15 Clarke Drive
San Mateo, CA 94401

[SIGNATURES CONTINUED NEXT PAGE]

IN WITNESS WHEREOF, the parties have executed this Agreement with an intent to be bound hereby as of the date this Agreement is recorded.

DOCUMENT SIGNED IN COUNTERPART

DBP:

DBP INVESTMENTS, a California general partnership

_____
Richard A. Bocci, general partner

_____
Debra Bocci, general partner

x _____
Mark L. Pender, general partner

x _____
Mary N. Pender, general partner

_____
Robert C. DeVincenzi, general partner

_____
Steven DeVincenzi, general partner

_____
Janice DeVincenzi, general partner

Address for notices:

DBP Investments
c/o Audrey K. Bell, C.P.A.
15 Clarke Drive
San Mateo, CA 94401

[SIGNATURES CONTINUED NEXT PAGE]

IN WITNESS WHEREOF, the parties have executed this Agreement with an intent to be bound hereby as of the date this Agreement is recorded.

DOCUMENT SIGNED IN COUNTERPART

DBP:

DBP INVESTMENTS, a California general partnership

Richard A. Bocci, general partner

Debra Bocci, general partner

Mark L. Pender, general partner

Mary V. Pender, general partner

Robert C. DeVincenzi, general partner

Steven DeVincenzi, general partner

Janice DeVincenzi, general partner

Address for notices:

DBP Investments
c/o Audrey K. Bell, C.P.A.
15 Clarke Drive
San Mateo, CA 94401

[SIGNATURES CONTINUED NEXT PAGE]

DOCUMENT SIGNED IN
COUNTERPART

KPP:

KING PLAZA PARTNERS, a California General Partnership

By: LITKE PROPERTIES, INC., a California corporation, general partner

By: _____
Jeffrey Litke, President

By: _____
Mark Litke, as trustee of the Mark Harlan Litke Trust, general partner

Address for notices:

King Plaza Partners
c/o Litke Properties, Inc.
1906 Lombard Street
San Francisco, CA 94123

STATE OF CALIFORNIA

County of LOS ANGELES

Title or type of Document RECIPROCAL EASEMENT + OPERATION
Number of Pages 15 Date of Document JAN. 11, 1997
Signer(s) Other than named below

On FEBRUARY 8, 2000 before me KRISTINE D. SANDOVAL personally appeared MARK L. PENDER

personally known to me (or proved to me on the basis of satisfactory evidence) to be the person(~~s~~) whose name(~~s~~) is/~~are~~ subscribed to the within instrument and acknowledged to me that he/~~she~~/~~they~~ executed the same in his/~~her~~/~~their~~ authorized capacity(~~ies~~), and that by this/~~her~~/~~their~~ signature(~~s~~) on the instrument the person(~~s~~), or the entity upon behalf of which the person(~~s~~) acted, executed the instrument.

WITNESS my hand and official seal.

Signature Kristine Sandoval (Seal)
Notary Public in and for said County and State

KRISTINE D. SANDOVAL
Commission # 1234667
Notary Public - California
Los Angeles County
My Comm. Expires Sep 16, 2003

UD01 (Rev. 4/94)

STATE OF CALIFORNIA

County of LOS ANGELES

Title or type of Document RECIPROCAL EASEMENT + OPERATION AG
Number of Pages Date of Document
Signer(s) Other than named below

On FEBRUARY 8, 2000 before me KRISTINE D. SANDOVAL personally appeared MARY Y. PENDER

personally known to me (or proved to me on the basis of satisfactory evidence) to be the person(s) whose name(~~s~~) is/~~are~~ subscribed to the within instrument and acknowledged to me that ~~he~~/she/~~they~~ executed the same in ~~his~~/her/~~their~~ authorized capacity(~~ies~~), and that by ~~this~~/her/~~their~~ signature(~~s~~) on the instrument the person(~~s~~), or the entity upon behalf of which the person(~~s~~) acted, executed the instrument.

WITNESS my hand and official seal.

Signature Kristine Sandoval (Seal)
Notary Public in and for said County and State

KRISTINE D. SANDOVAL
Commission # 1234667
Notary Public - California
Los Angeles County
My Comm. Expires Sep 16, 2003

UD01 (Rev. 4/94)

STATE OF CALIFORNIA

County of SAN FRANCISCO

Title or type of Document RECIPROCAL EASEMENT & OPER AGT
Number of Pages _____ Date of Document 1-11-97
Signer(s) Other than named below _____

On 1/26/00 before me KAY LOWREY personally appeared RICHARD A. BOCCI AND DEBRA BOCCI

~~personally known to me~~ (or proved to me on the basis of satisfactory evidence) to be the person(s) whose name(s) is/are subscribed to the within instrument and acknowledged to me that he/she/they executed the same in his/her/their authorized capacity(ies), and that by this/her/their signature(s) on the instrument the person(s), or the entity upon behalf of which the person(s) acted, executed the instrument.

WITNESS my hand and official seal.

Signature K. Lowrey
Notary Public in and for said County and ~~State~~

(Seal)

K. LOWREY
COMM. #1185644
NOTARY PUBLIC-CALIFORNIA
SAN FRANCISCO COUNTY
My Comm. Expires June 1, 2002

PC01

UD01 (Rev. 4/94)

STATE OF CALIFORNIA

County of SAN FRANCISCO

Title or type of Document RECIPROCAL EASEMENT & OPERAT. AGT.
Number of Pages _____ Date of Document 1-11-97
Signer(s) Other than named below _____

On 1/25/00 before me KAY LOWREY personally appeared ROBERT C. DEVINCENZI, STEVEN DEVINCENZI AND JANICE DEVINCENZI

~~personally known to me~~ (or proved to me on the basis of satisfactory evidence) to be the person(s) whose name(s) is/are subscribed to the within instrument and acknowledged to me that he/she/they executed the same in his/her/their authorized capacity(ies), and that by this/her/their signature(s) on the instrument the person(s), or the entity upon behalf of which the person(s) acted, executed the instrument.

WITNESS my hand and official seal.

Signature K. Lowrey
Notary Public in and for said County and ~~State~~

(Seal)

K. LOWREY
COMM. #1185644
NOTARY PUBLIC-CALIFORNIA
SAN FRANCISCO COUNTY
My Comm. Expires June 1, 2002

PC01

UD01 (Rev. 4/94)

STATE OF CALIFORNIA)
) ss.
COUNTY OF SAN FRANCISCO)

On 1-11-97 before me, the undersigned, a Notary Public in and for said State, personally appeared JEFFREY LITKE AND MARK LITKE

_____, personally known to me (or proved to me on the basis of satisfactory evidence) to be the person(s) whose name(s) ~~is~~/are subscribed to the within instrument and acknowledged to me that ~~he/she~~/they executed the same in ~~his/her~~/their authorized capacity(ies), and that by ~~his/her~~/their signature(s) on the instrument the person(s), or the entity upon behalf of which the person(s) acted, executed the instrument.

WITNESS my hand and official seal.

Signature _____

Name _____
(typed or printed)

K. LIPPEL
Comm. #1037084
NOTARY PUBLIC CALIFORNIA
City & County of San Francisco
Comm. Expires Aug 24 1998

(This area for official notarial seal)

STATE OF CALIFORNIA)
) ss.
COUNTY OF)

On _____ before me, the undersigned, a Notary Public in and for said State, personally appeared

_____, personally known to me (or proved to me on the basis of satisfactory evidence) to be the person(s) whose name(s) is/are subscribed to the within instrument and acknowledged to me that he/she/they executed the same in his/her/their authorized capacity(ies), and that by his/her/their signature(s) on the instrument the person(s), or the entity upon behalf of which the person(s) acted, executed the instrument.

WITNESS my hand and official seal.

Signature _____

Name _____
(typed or printed)

(This area for official notarial seal)

EXHIBIT D

Actions and Recommendations of DBP

DBP has not sat by idly as the parking problems worsened. DBP has taken proactive steps to better understand the parking issues and work toward solutions that could alleviate at least some of the excess demand created by the proliferation of food uses. These steps include:

• Hiring a parking engineer, Gary Black. Mr. Black arranged for detailed parking counts under various circumstances (weekday, weekend, with tournament play) and his data has been provided to the King Plaza owners. Mr. Black has advised DBP on potential solutions and drawbacks of the proposed parking management plan.

• Hiring an expert in bowling center operations, Ken Mischel. Mr. Mischel is a recognized authority on how bowling centers operate and how parking restrictions can affect these operations. He has provided his opinions and advice to the King Plaza owners.

• Exploring opportunities for off-site employee parking. DBP investigated an opportunity to lease property from CalTrans that could have been used for employee parking. Unfortunately, that did not pan out, but DBP continues to look for property that could be leased for this use. The King Plaza owners, whose tenants have many more employees, should be doing the same. Increasing employee parking off site would free up more spaces for customers and bowlers alike.

• With the cooperation of the King Plaza owners, initiating an interim parking management plan.

• In order to clarify rights and duties under the reciprocal easement, initiating a lawsuit in San Mateo Superior Court.

• Participating in at least four mediation sessions going back to 2016.

• Through its attorneys, informing the King Plaza owners of the reasons why their proposed parking management plan and CC&Rs is unfair to DBP and cannot be accepted by DBP's partners.

Parking issues are complex, particularly when there is too much demand for available spaces. Viable solutions needed to be generated and vetted by professional engineers. Solutions need to be driven by data, not anecdotes or politics.

To that end, DBP suggests that the City retain a neutral parking engineer who can review the available data and update it as necessary, discuss solutions with the ownership groups and tenants, and make recommendations to the City on how the parking can be improved. At that point, an appropriate zoning amendment may be considered. The cost of the engineer should be shared by the two ownership groups.

As a further measure, the City should consider making food uses in the PD-47 zone a conditional use. That was the protocol when PD-47 was created in 1991 – food uses in the shopping center were limited to 8,158 sq.ft. and any major additions required a use permit. But when the Development Standards were revised in 1998, food uses became a permitted use. Going

forward, reinstituting the conditional use permit requirement would allow the City to exercise more control and limit uses with excessive parking demand.

In the meantime, DBP recommends that the ownership groups continue to abide by their interim settlement agreement. While it is not a permanent solution, it will help to ease some of the problems while the neutral engineer conducts his/her review.

In evaluating these recommendations, the Commission should ask staff:

1. Would the City and owners benefit from having a neutral parking engineer review the available data and make recommendations?

2. Should the proposed zoning amendment be tabled while an engineer completes a review and makes recommendations?

3. What happens if the Planning Commission and City Council do not adopt the proposed zoning amendment? What further processes would the ownership groups need to follow to improve the parking situation?

Attachments:

Letter from DBP partners

Interim Settlement Agreement/Parking Management Plan

August 29, 2022

Planning Commission
City of Daly City
333 90th Street
Daly City, CA 94015

Re: September 6, 2022 Hearing
King Plaza Shopping Center

Dear Commissioners:

This letter is submitted on behalf of DBP, a California general partnership. DBP owns the parcel that is occupied by the Classic Bowling Center. Our ownership group has been involved with the King Plaza properties going back to the 1980's.

Dealing with the parking issues has become a nightmare. In a nutshell, the problems are tied to the expansion of the Manila Market and the increasing number of food uses at the King Plaza shopping center. Back in the early 1990's, food uses were about 15% of the shopping center. That grew to 50% and is now close to 80%. These food uses involve more customers, more employees, and more deliveries, and their peak hours are all about the same. Over time, this has created more demand than parking spaces.

This wasn't supposed to happen. Back in the early days, the bowling center parcel and the two shopping center parcels were owned by an earlier version of DBP. In the 1990's (and after the Loma Prieta earthquake), the shopping center was struggling and Jeffrey Litke came in as a tenant in common to help revive the shopping center and eventually own it while we concentrated on the bowling center.

We went through a long process in the 1990's to get Daly City's approval to divide the property. The bowling center parcel did not have enough parking on that site alone, which wasn't an issue when DBP owned all three parcels. But the City was concerned about what would happen if the parcels were divided – how could shared parking be guaranteed and enforced?

In 1997 and 1998, we came up with a plan that worked. Mr. Litke and DBP entered into a reciprocal easement where we agreed to share parking and maintenance costs on an equal basis.[1] Then, the City adopted Planned Development Standards in 1998 that again required shared parking. An important part of these Development Standards was that the shopping center owned by Mr. Litke was supposed to have a balanced mix of tenant uses, with compatible hours, and he was supposed to be submitting leases to the City so that staff could monitor the tenant mix. It doesn't seem like that happened.

---

[1] After everyone had signed the easement and it was notarized, Mr. Litke took it to his title company to record, but through an error on their end, the easement was not recorded. This did not come to light until Mr. Litke was in contract to sell the shopping center to the Ho family. But he had Tammy Ho sign a statement acknowledging the easement before escrow closed. At all times, we have performed in accordance with the principles of the easement and have paid our share of the maintenance costs for the shared parking and common areas – over $700,00.

Things got worse after Mr. Litke sold the shopping center to the King Plaza Center, LLC (owned by the Ho family) in 2007. For whatever reasons, more and more food uses have come into the shopping center, replacing personal service and retail uses that might have different parking demands and different peak hours. Again, it does not appear that the City was allowed to perform its oversight function under the Development Standards. Because food uses with the same peak demand now predominate, parking becomes a huge problem during lunch, dinner, and the weekends.

This is not a good situation for our tenant, Classic Bowling Center. It isn't a good situation for the shopping center tenants, either. But it is not a situation that DBP created or controlled. And we can't have a solution that comes at the expense of our innocent tenant.

We tried to address the problems with the Ho family, without success. Instead, they tried to impose restrictions on the shared parking that we are guaranteed under the easement and under the Development Standards. This led to the filing of a lawsuit for injunctive relief in 2016. Trial is scheduled for November in this case. It seems that the Ho family is trying to pre-empt the court case by having the City adopt a parking plan that is contrary to the easement before the court can act.

DBP has not been idle. We engaged a parking engineer and an expert in bowling operations to help us understand the situation better and look for solutions. We have been looking at sites for off-site parking where employees of Classic Bowl and the shopping center could park to free up more spaces for customers and bowlers. We went to mediation with the Ho family several times, but were unable to reach an agreement. We did agree to a temporary parking management plan and put it in place, but the Hos would not renew it and instead have pursued their plan for time limits on many of the shared spaces.

The proposed time limits on many spaces near the bowling center would be a disaster for our tenant and would likely drive it out of business. That would not be a fair solution to a problem not of our making.

We did ask the Bowling Center employees to park in the upper lot for a time, as the proposed plan suggests. But they kept getting notes that their cars were interfering with deliveries. So it is questionable whether the part of the proposed plan for untimed parking in this area would be workable.

What can be done? First and foremost, the City needs current data on parking usage and numbers of employees and it needs to have objective professional advice from a qualified parking engineer. Then, the engineer can make recommendations based on facts and professional experience, not politics or anecdotes or pleas from merchants. DBP is willing to pay for half of the consulting fees for this effort.

While this process is going on, the ownership groups should agree to return to the interim agreement that we had in place. Although it is not perfect and is not a long-term solution, it did have some positive effect.

Third, City staff should explore ways to achieve a more balance tenant mix at the shopping center, as envisioned by the 1998 Development Standards.

What the City should **not** do is approve the proposed Parking Management Plan and CC&Rs before you, even on an interim basis. Even in a short period of time, frustration from bowlers who cannot find an untimed space or who have their cars towed from a timed space can cause leagues and tournaments to relocate, and that business is unlikely to come back. That would not be fair to the Classic Bowl, which is already the victim of the shopping center's failure to live up to the Development Standards.

We are providing you with a great deal of information to support our position. The City needs even more information in the form of parking counts and engineering opinions to come to a just decision. Let's be sure that all decisions made are driven by data and professional expertise.

We will be present for the hearing on September 6 to answer any questions. Thank you for considering our position.

Sincerely.

Steven P. DeVincenzi

General Partner, DBP

August 29, 2022

Planning Commission
City of Daly City
333 90th Street
Daly City, CA 94015

Re: September 6, 2022 Hearing
King Plaza Shopping Center

Dear Commissioners:

This letter is submitted on behalf of DBP, a California general partnership. DBP owns the parcel that is occupied by the Classic Bowling Center. Our ownership group has been involved with the King Plaza properties going back to the 1980's.

Dealing with the parking issues has become a nightmare. In a nutshell, the problems are tied to the expansion of the Manila Market and the increasing number of food uses at the King Plaza shopping center. Back in the early 1990's, food uses were about 15% of the shopping center. That grew to 50% and is now close to 80%. These food uses involve more customers, more employees, and more deliveries, and their peak hours are all about the same. Over time, this has created more demand than parking spaces.

This wasn't supposed to happen. Back in the early days, the bowling center parcel and the two shopping center parcels were owned by an earlier version of DBP. In the 1990's (and after the Loma Prieta earthquake), the shopping center was struggling and Jeffrey Litke came in as a tenant in common to help revive the shopping center and eventually own it while we concentrated on the bowling center.

We went through a long process in the 1990's to get Daly City's approval to divide the property. The bowling center parcel did not have enough parking on that site alone, which wasn't an issue when DBP owned all three parcels. But the City was concerned about what would happen if the parcels were divided – how could shared parking be guaranteed and enforced?

In 1997 and 1998, we came up with a plan that worked. Mr. Litke and DBP entered into a reciprocal easement where we agreed to share parking and maintenance costs on an equal basis.[1] Then, the City adopted Planned Development Standards in 1998 that again required shared parking. An important part of these Development Standards was that the shopping center owned by Mr. Litke was supposed to have a balanced mix of tenant uses, with compatible hours, and he was supposed to be submitting leases to the City so that staff could monitor the tenant mix. It doesn't seem like that happened.

[1] After everyone had signed the easement and it was notarized, Mr. Litke took it to his title company to record, but through an error on their end, the easement was not recorded. This did not come to light until Mr. Litke was in contract to sell the shopping center to the Ho family. But he had Tammy Ho sign a statement acknowledging the easement before escrow closed. At all times, we have performed in accordance with the principles of the easement and have paid our share of the maintenance costs for the shared parking and common areas – over $700,00.

Interim Settlement Agreement

1. **Sec. A B, C (28 Spaces)**. 1 Hour Parking Monday through Sun, all day.
2. **Sec. D (center of upper lot).** Large trucks loading and unloading Monday through Friday, 8am to 5pm. After 5 pm regular parking for cars, **no large trucks loading and unloading, blocking any of these parking spaces.**
3. **Sec. E (North boundary of upper lot).** Large trucks loading and unloading Monday through Friday 8 am to 5 pm. After 5 pm regular parking, **No large trucks loading and unloading or parking at all in the upper lot.**
4. **Upper lot on Saturday.** Parking for automobiles and there is an expectation that there might be one or two deliveries on Saturday morning, between 8 am and 1 pm for the market. On those occasions the delivery truck will unload after parking between parked cars and not hinder any of the parking spaces for cars.
5. **Upper Lot, White Truck.** The market needs to park its white truck on the upper lot. The market agrees to park the truck so it does not affect flow of traffic for parking cars, so it will be parked next to the wall close to the ramp which leaves the rest of the upper lot for parking by customers.
6. **Sec. F (Three spaces in front of dental building).** Regular parking, no time limits.
7. **Sec. G (16 spaces across from the bowling alley).** Southern 8 spaces are 1 hour parking, Monday through Saturday, 8am to 6:30 pm)
8. **Sec. G (16 spaces across from the bowling alley).** Northern 8 spaces regular parking, no time limits.
9. **The rest of the parking lot other than A, B, C, D, E, F, and G.** Regular parking, no time limits.

A. A final settlement, if reached, will be presented to Daly City as a "Parking Plan" and submitted for approval to the Planning Department.

B. "CAM" reports will be delivered to the bowling alley quarterly, with payment due in 30 days.

C. There is an undisputed right to tow any vehicle from the 1 hour parking spaces, after that vehicle exceeds 1 hour in the parking space.

D. The parking lot is often filled over capacity (except for times listed in Sec. 2 and 3 above) those approximately 60 spaces in the upper lot might provide enough parking to

accommodate the parking for all uses. The parties will test this over the life of this Interim Agreement to see if this resolves some of the parking problems.

E. This agreement is an interim agreement and the parties agree to check in with the mediator in 90 days to see if there needs to be anything adjusted to make this arrangement work better for all parties. This report can be given to the mediator by phone, in person or in writing.

F. It is expected that the parties will enter into a final settlement agreement within 6 months. They will schedule with the mediator another session to arrange for a final mediation and a signed agreement. If no final agreement is reached, this Interim Agreement will terminate.

G. The lawsuit is stayed pending this interim settlement and the trial date will be continued. If either side wants to end the stay earlier, then it needs to give the mediator and the other party 30 days notice that the stipulated stay will be lifted.

H. There is an unrecorded easement on this property and no party has the original document, but a copy exists in the Daly City files. When there is a final agreement, the lawyers will find a way to record this copy (or another original) so that this part of the dispute is permanently resolved.

I. If there are any disputes, during this Interim Agreement, they will be brought before Judge Cahill (in as inexpensive form as possible) and he will act, if the parties agree, as a arbitrator on any dispute.

J. This agreement is not enforceable under CCP 664.6 and is inadmissible for any purpose because it is protected by the mediator's privilege.

Dated: April 5, 2018

PARKING MANAGEMENT PLAN
KING PLAZA SHOPPING CENTER

This proposal allows for shared parking for patrons in Parcels A, A-1, and B.
Patrons and employees of the tenants of Parcel B shall use the Common Area of the Shopping Center in accordance to the terms of the King Plaza Shopping Center 2022 Declaration of Covenants, Conditions, and Restrictions ("these CC&Rs") provided that conditions under these CC&Rs have been met.

This proposal provides 159 unlimited parking spaces, 54 one-hour parking spaces, 93 two-hour parking spaces, 3 twenty minute parking spaces, 8 ADA parking spaces, and 9 loading and unloading parking spaces in the upper lot.

Total on-site vehicle parking spaces provided: 326
Total Required by Ordinance No. 1255: 302

Specific Parking Space Plan (See attached map.):

Section A, B, C (54 spaces) one hour parking, seven days a week, except for 8 ADA, which are unlimited time parking. Note: This is a continuation of the one hour spaces from the initial plan submitted in 1998 by the prior owner. Note: The number of ADA spaces was determined by an ADA consultant.

Section D: (93 spaces) two hour parking, seven days a week.

Section E "Upper Corner Lot" at King Drive and Callan Boulevard (9 spaces) reserved for loading and unloading of delivery vehicles (defined as trucks with 6 axles or more), seven days a week, 7:00am-1:00pm. Manila Oriental Market delivery truck parking: This truck may be parked in the Upper Corner Lot at all hours, on all days, but must be parked in loading and unloading zone space in a manner that does not impede traffic flow. (53 spaces) unlimited parking.

Section E: (106 spaces) unlimited time parking, of which a majority are closest to Classic Bowling.

Section F: Parallel parking (3 spaces) 20 minute time parking, seven days a week, in front of 980 King building closest to King Drive.

Street Parking: (80 spaces) surrounding the Center for employees of both Classic Bowling and King Plaza tenants which are presently unlimited time parking, that are available to employees.

Delivery trucks serving the tenant of Parcel B shall be parked wholly on Parcel B or on the adjacent public street when loading/unloading so as not to impede access to parking and/or the driveways in and to the Common Areas. The times and days for such deliveries shall be under the control of the tenant of Parcel B otherwise.

Large Scale Event Evening Parking: Businesses holding large scale evening events of 200 or more shall provide notice to the Declarant at least seven days prior to the event. Based on the amount of notices

received for that day, the Declarant may determine that such business shall comply with congestion management requirements to provide, at the expense of said business, for valet parking, or require bus, vanpool, or carpool arrangements for their customers.

Employee Parking:
The Declarant shall consult with the San Mateo County Congestion Management Agency on ways to reduce employee parking requirements through use of transportation demand management ("TDM"). Should the Declarant develop a TDM program, Shopping Center tenants and Parcel B tenants will be instructed about the TDM Program, and asked to comply with it.

Employees working at King Plaza Center shall park in the "Upper Corner Lot" at King Drive and Callan Boulevard or on the street in the perimeter parking surrounding the shopping center. Tenants will be required to instruct their employees to refrain from parking in surrounding residential neighborhoods. The owners of the tenants of Parcel B will be asked to instruct their employees to also park in the Upper Corner Lot or on the street in the perimeter parking surround the shopping center, and to refrain from parking in surrounding residential neighborhoods.

Enforcement Issues:
Time limited parking will be enforced by Declarant or its successor-in-interest.

All of the tenants in the King Plaza Center and the tenants of Parcel B will be notified of parking limits, the fact that parking limits will be enforced, and that vehicles will betowed if they do not comply. The Declarant will post signage regarding parking enforcement and towing as required by law.

Attachment: King Plaza Center – Parking Lot Management Plan/Site Plan

KING PLAZA CENTER - PARKING LOT MANAGEMENT PLAN

LEGEND

ON SITE

	Time Limit	Number of Spaces
ADA	No Limit	8
* A, B, C	1 Hour	54
D	2 Hour Limit	93
E	No Limit	159
** F	20 Minute Limit	3
Loading Zone	8 spaces +1 Manila Truck space	9

* 1 Hour Parking.

** Three 20 minute limit, plus one ADA, as required by Daly City Building Inspector.

No Loading

TOTAL SPACES ON SITE: 326

Note: All ADA spaces have been relocated from the perimeter of the bowling building, allowing more standard parking spaces.

Revision Number:	A	Property Address: King Plaza, 900 King Drive, 950-980 King Drive, Daly City, Ca 94015	Project Title: **Proposed New Parking Map Plan**	Owner Information: King Plaza Center, LLC, 1534 Plaza Lane, Suite 326, Burlingame, Ca 94010	Page: **1 - 1**
Revision Date:	11.15.2021				

KING PLAZA CENTER - PARKING LOT MANAGEMENT PLAN

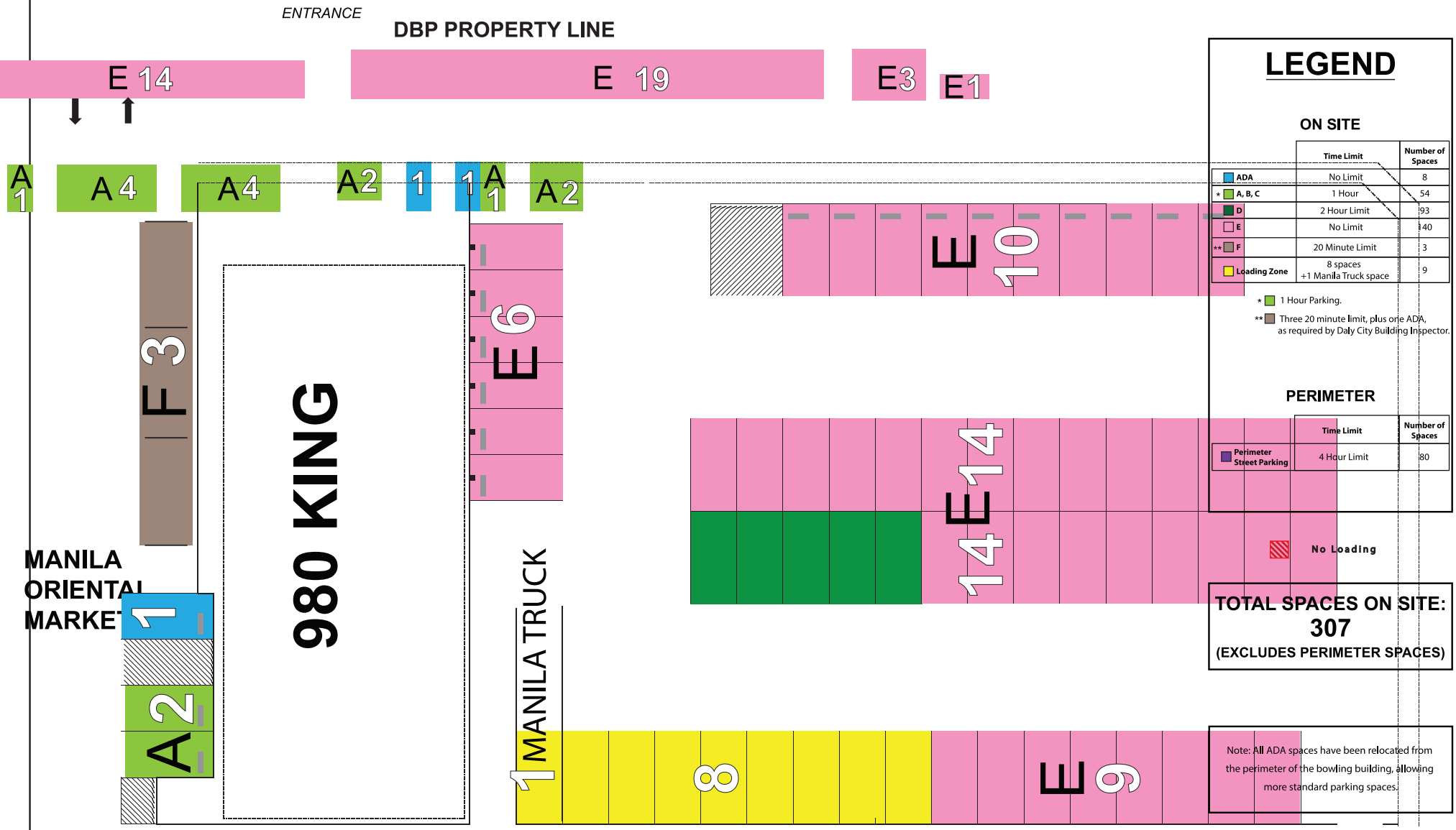

Revision Number: A

Revision Date: 04.27.2021

Property Address:
King Plaza
950 King Drive
Daly City, Ca 94015

Project Title:
Proposed New Parking Map Plan

Owner Information:
King Plaza Center, LLC
1534 Plaza Lane
Suite 326
Burlingame, Ca 94010

Page:
1 - 1

KING PLAZA SHOPPING CENTER 2022 DECLARATION OF COVENANTS, CONDITIONS, AND RESTRICTIONS

CHAPTER ONE: GENERAL PROVISIONS

A. *Name of Instrument* This instrument may be referred to as the "King Plaza Shopping Center 2022 Declaration of Covenants, Conditions, and Restrictions." This instrument is herein referred to as "these CC&R's." These CC&R's shall also be construed to include any plan submitted by Declarant and approved by the City of Daly City pursuant to these CC&Rs.

B. *Declarant* "Declarant" is King Plaza Center, LLC, a Delaware limited liability company. For purposes of construing these CC&R's, the term "Declarant" shall include any transferee, successor, or assignee of King Plaza Center, LLC, including but not limited to a transferee, successor, or assignee by operation of law or a "Mortgagee" acquiring Declarant's interest in the Development by foreclosure or by deed in lieu of foreclosure. The term "Mortgagee" as used herein is defined in Chapter 8, Section D.

C. *Shopping Center Parcel* Declarant is the owner of that certain real property located in the City of Daly City, San Mateo County, State of California, more particularly described as shown on that Description of Property attached hereto as **Exhibit "A"** and incorporated by reference herein, commonly known as 950-980 King Drive, Assessor Parcel Number 091-175-220, being 4.279 acres, referenced as the "Shopping Center Parcel" herein. The Shopping Center Parcel includes land referenced as Lot A and Lot A-1 in City of Daly City Ordinance 1255 adopted on April 27, 1998.

D. *Tenants* "Tenants" are those persons and entities who now or in the future possess leasehold interests in the Shopping Center Parcel pursuant to written leases with Declarant.

E. *Common Areas* "Common Areas" as used herein means all realty and improvements in or to the Shopping Center Parcel that are not leased to any Tenants and that are designated by Declarant for the joint use and benefit of Declarant and all Tenants, specifically including all parking areas, access roads, driveways, entrances and exits, retaining walls, landscaped areas, truck service-ways, loading docks, pedestrian malls, courts, stairs, ramps, sidewalks, exterior stairs, utilities and related utility lines and meters, and on-site and off-site signs identifying or advertising the Shopping Center.

F. *Bowling Alley Parcel* The "Bowling Alley Parcel" is the property commonly known as 900 King Drive, also located in the City of Daly City, San Mateo County, State of California, more particularly described as shown on that Description of Property attached hereto as **Exhibit "B"** and incorporated by reference, and identified by Assessor Parcel Number 091-175-200. Said parcel is improved with a structure that contains a bowling alley operating under a conditional use permit. Upon information and belief, the Bowling Alley Parcel is currently owned by DBP Investments, a California General Partnership.

G. *Prior Subdivision & Certificate of Compliance* The Shopping Center Parcel and Bowling Alley Parcel were created by the division of three parcels (former Assessor Parcel Numbers 091-175-190, 091-175-150, and 191-175-180) into two parcels as evidenced by that certain Certificate of Compliance recorded in the Official Records of San Mateo County on September 25, 2000 as document number 2000-118884. Said Certificate of Compliance states on its face that it "is subject to the findings and conditions of Minor Subdivision MS97-1 and resolution 98-26 of the City of Daly City."

H. *Purpose* Declarant's purpose in executing these CC&Rs is to govern the Common Areas of the Shopping Center Parcel, to enhance, maintain, and protect the value and attractiveness of the Shopping Center Parcel, and to otherwise comply with the requirements of the aforementioned Certificate of Compliance, including the findings and conditions of Minor Subdivision MS97-1 and Resolution 98-26, as well as City of Daly City Ordinance 1255. The provisions of these CC&R's and any licenses thereunder shall be liberally construed to effect its purpose.

I. *Bowling Alley CC&R's* It is anticipated that the owner of the Bowling Alley Parcel will submit CC&R's for approval of the City of Daly City as to covenants, conditions, and restrictions applicable to the Bowling Alley Parcel. These CC&R's do not purport to regulate the Bowling Alley Parcel and shall not be so construed.

J. *No CID Intended* Declarant does *not* intend these CC&R's to be a plan of Shopping Center Parcel ownership that is a common interest development under California Civil Code §6534, and does *not* intend that their ownership be governed by the California Commercial CID Act (Cal. Civil Code §§6500 *et seq*.). Other than the rights granted and restrictions set forth herein, no other rights or restrictions are contemplated, and no plan of joint ownership, partnership or joint venture is intended to be created.

K. *Declarant's Reservation of Rights* All rights not expressly granted by these CC&R's are reserved to Declarant. Said rights include, but are not limited to, all rights to future development of the Shopping Center Parcel pursuant to all relevant zoning and building codes as may now apply or hereafter beneficially apply to the Shopping Center Parcel, and these CC&Rs do not and are not intended to restrict the rights to so develop the Shopping Center Parcel.

L. *Effective Upon Approval & Recording by Declarant* This instrument is not effective unless (1) approved by the City of Daly City as required by the aforementioned Certificate of Compliance, and (2) recorded by Declarant in the Official Records of San Mateo County.

M. *No Waivers* Failure to enforce any provision of these CC&R's shall not constitute a waiver of the right to enforce the provision thereafter.

CHAPTER TWO: NON-EXCLUSIVE LICENSES

A. *License Offer to Tenants of Shopping Center Parcel* Declarant offers Tenants of the Shopping Center Parcel, solely during the terms of their respective leases, a non-exclusive license to use the Common Areas of the Shopping Center Parcel during such period for ingress and egress, and the parking of vehicles, subject to the covenants, conditions, and restrictions below.

B. *License Offer to Owners of Bowling Alley Parcel* Declarant offers the Owner of the Bowling Alley Parcel, solely for so long as the Bowling Alley Parcel is used exclusively as a Bowling Alley pursuant to a valid conditional use permit from the City of Daly City, a non-exclusive license to use the Common Areas of the Shopping Center Parcel during such period for ingress and egress, and the parking of vehicles, subject to the covenants, conditions, and restrictions below.

C. *Exclusive Manner of Acceptance of Offer; Licensees* The exclusive manner of acceptance of said license is as follows: The prospective licensee must deliver to Declarant a notarized statement that the licensee and all tenants of licensee agree to be bound by these CC&R's and said statement must be acknowledged and accepted in writing by Declarant, with a copy provided to the licensee. The holder of a written license under these CC&R's is referred to as a "Licensee" herein.

D. *Scope of License Includes Employees and Customers* Licensees may permit their employees and customers to use the Common Areas of the Shopping Center Parcel for ingress and egress, and the parking of vehicles during any such employees' actual shift of work and during any such customers' actual patronage of Licensee's business, subject to these CC&R's. As to the owner of the Bowling Alley Parcel, it may permit use of the license by any tenant and employees and customers of its tenant, subject to these CC&R's. However, for purposes of enforcing these CC&R's and any license thereunder, any violations of these CC&R's, or a license thereunder by a permitted user shall be deemed to be a violation by the Licensee.

E. *No Third Party Beneficiaries* These CC&R's are solely intended to benefit Declarant and Licensees; no one except Declarant has standing to enforce these CC&R's.

F. *License Subject to Government Approved Regulations & Modifications* Any and all use related to the

parking of vehicles shall be subject to parking management plan approved by the City of Daly City. Said plans may be subsequently revised by Declarant upon application to and approval by the City of Daly City for good cause, including but not limited to changed circumstances, ineffectiveness, or enforcement difficulties. Said plans shall be executed by Declarant.

G. *License Is Conditional* These CC&R's shall not be construed as extending the leasehold interest of any Tenants, or as granting an easement to any Licensee or other user; rights created by these CC&R's are intended to be in the nature of a mere conditional license to use the Common Areas of the Shopping Center Parcel in compliance with these CC&R's that may be revoked by Declarant for good cause, including but not limited to failure to abide by conditions of, or a material breach of these CC&R's. For example, good cause for revocation includes but is not limited to failure to pay fees required hereunder in a timely manner.

H. *Licenses Not Transferrable* Licenses are not transferrable or assignable. Any purported transfer or assignment of a license shall be null and void and shall automatically null and void the license itself.

I. *Declarant Has No Interest in Bowling Alley Parcel* These CC&R's shall not be construed as granting any interest whatsoever in the Bowling Alley Parcel to Declarant who hereby confirms that the owner of the Bowling Alley Parcel retains the exclusive rights to the Bowling Alley Parcel and may restrict parking on said Bowling Alley Parcel to customers of the Bowling Alley or as otherwise desired, subject to approval of the City of Daly City pursuant to the aforementioned Certificate of Compliance. Declarant likewise has no maintenance and repair obligations, or reimbursement responsibility, whatsoever with respect to the Bowling Alley Parcel.

J. *Owner of Bowling Alley Parcel May Terminate the License At-Will Upon Notice* The owner of the Bowling Alley Parcel may terminate its license under these CC&R's at any time and for any reason by delivering a notarized notice of termination a 30 days advance notice to Declarant . However, such notice of termination shall not relieve Declarant from any accrued liability arising under these CC&R's or any license thereunder, nor any tort liability.

K. *Declarant May Revoke License for Good Cause* Declarant may revoke any license for good cause which includes but is not limited to a Licensee's failure to abide by rules and regulations established by these CC&R's; a Licensee's commission of waste, nuisance, intentional torts, or crimes upon the Common Areas of the Shopping Center Parcel; or a Licensee's failure to meet conditions of, or material breach of, its License, especially but not limited to its failure to make required payments. If a license is revoked or terminated for good cause, these CC&R's shall not be construed so as to require Declarant to re-issue a license to that Licensee or any transferee, assignee, or successor in interest of that Licensee.

CHAPTER THREE: COVENANTS OF DECLARANT

A. *Common Area Maintenance Standards* Declarant covenants that the Common Areas of the Shopping Center Parcel shall be maintained at all times in good repair, and in safe, sanitary and serviceable condition and free and clear of debris. Common Area maintenance and repair shall include, without limitation, resurfacing, repainting and restriping of the paved areas, cleaning, sweeping and other janitorial services; garbage control; policing and security; planting and landscaping; directional signs and other markers; lighting; utilities serving the Common Area; premiums on public liability insurance allocable to the Common Area; parking management devices and services; other management services allocable to the Common Area; and other expenses reasonably necessary for the maintenance and repair of the Common Area as specified in these CC&R's, as otherwise may be required by plans submitted by Declarant, or as required in the reasonable business judgment of Declarant. Declarant may hire agents including but not limited to a professional property and/or parking management company to perform its duties under these CC&R's and any license hereunder.

B. *Site Plan, Parking and Circulation Plan, & Parking Management Plan* A depiction of Declarant's approved Site Plan and Parking Management Plan applicable to the Common Areas of the Shopping

Center Parcel is attached as **Exhibit "C"** hereto. The Site Plan, including all significant physical structures and improvements are depicted. The Parking Management Plan, including all sidewalks, cross-walks, driveways, roadways, traffic control signs, fire lanes, and parking spaces are also depicted, as well as any applicable parking restrictions (disabled spaces, time-limited spaces, loading zones, etc.). All deliveries shall be made in accordance to the Parking Management Plan. Parking spaces for disabled persons are scattered throughout as required by law. The Common Areas shall not be used for parking and operation of motor homes or recreational vehicles and equipment, nor shall the Common Areas be used for overnight parking except as approved in the Parking Management Plan.

C. *Employee Parking Program* All employees of Licensees shall be encouraged to take public transportation, ride-share, car pool, or bicycle to work. All employees of Licensees who drive to work shall preferably park their vehicles on the public street. If public street parking is not available upon arrival, all employees of Licensees who park on the Shopping Center Parcel must park in the upper lot furthest from Shopping Center and Bowling Alley businesses. Declarant may require Licensees to report the license plate numbers of all employees working on such Licensees' property and may require all employees to affix a decal or other marker on or in their vehicle.

D. *Garbage Plan* Declarant's garbage plan is as follows:

1. Licensee Garbage Bins All Licensees shall be solely responsible for disposing of garbage generated from their own businesses in garbage bins. Said garbage bins shall be located on the respective properties (leased or owned) of Licensees, unless Licensee has obtained the express written consent of Declarant to locate garbage bins at a specific location within the Common Areas. Licensee garbage bins shall be enclosed or covered, kept reasonably free of vermin, and such bins and enclosures shall be bought or constructed at Licensee's own expense.

2. Public Garbage Cans Declarant shall maintain covered garbage cans for incidental public use of customers throughout the Shopping Center Parcel and shall empty such cans on a regular (at least bi-weekly) basis. Declarant may require any Licensee that is reasonably perceived to generate excessive public garbage (*e.g.* a coffee shop that serves beverages in disposable cups) to maintain one or more public garbage cans provided by Declarant for public use in Common Areas on or about the vicinity of the Licensees business or at locations where that business's garbage is commonly found, and to empty said cans upon a regular daily schedule. To minimize vermin, no public cans shall be uncovered.

E. *Enforcement Plan* Declarant covenants to enforce these CC&R's and all plans it submits hereunder that are approved by the City of Daly City. Enforcement shall include requiring Licensees to affirmatively consent to these CC&R's in writing, and may include without limitation such discretionary other remedies as providing warning notices to violators; towing the vehicles of violators in a manner consistent with California law; surcharging Licensees for the cost of security to deter crime reasonably perceived to be associated with the customers of any Licensee; suing Licensees and/or their invitees for damages, indemnity, or subrogation related to torts; requiring Licensees to hire and use valet services, bus services, ride-share services, or off-site parking locations during special events that are anticipated to draw more than a specified number of people; and temporarily suspending repeat-offenders or permanently banishing persistent repeat-offenders from using all or parts of the Common Areas of the Shopping Center Parcel.

F. *Cumulative Remedies* Every remedy provided in these CC&R's shall be cumulative and not exclusive. Failure to exercise any remedy provided for in these CC&R's shall not, under any circumstances, be construed as a waiver of the remedy.

CHAPTER FOUR: LICENSE FEES CONDITIONS

A. *Tenants Obligation to Reimburse Declarant's Cost of Performance* The rent paid by Tenants shall be deemed to include their license fee, and lease provisions related to common area maintenance costs

will be deemed to extend to include the Common Area of the Shopping Center Parcel. However, if not otherwise specified in said leases, and as to all new leases or lease renewals, Tenants shall be obligated to pay the reasonable cost of performance by Declarant of its duties under these CC&R's. The cost of performance includes all matters reasonably arising under or related to these CC&R's and any licenses thereunder, including but not limited to expenses incurred with respect to repair and maintenance, management fees, insurance, and the cost of enforcement including but not limited to attorney's fees. If Declarant manages the Common Area of the Shopping Center Parcel directly the management fee shall be ten percent of expenses incurred. The "cost of performance" shall otherwise be liberally construed in favor of Declarant and deference shall be given to Declarant's reasonable business judgment. As among Tenants, one hundred percent of the cost of performance shall be apportioned as specified in their respective leases.

B. *License Fee of Owner of Bowling Alley Parcel* The owner of the Bowling Alley Parcel shall pay an annual license fee. The minimum license fee shall be $96,000 for base year 2022. Thereafter, the license fee shall be updated annually by multiplying the then existing License Fee by the greater of percentage increase in a) the San Francisco-Oakland-San Jose Consumer Price Index for All Urban Consumers (CPI-U) or b) the Producer Price Index by Commodity: Special Indexes: Construction Materials over the immediately preceding year or c) such other similar index as determined by the Licensor if the preceding indices are not in use at the time; however, said percentage change shall not be lower than zero percent (0%). The annual increase shall be based upon end of calendar year (*i.e.* December) index reports.

C. *Billing & Deadlines*

1. Tenants Declarant shall periodically bill Tenants (monthly, quarterly, or annually). The period shall be determined as specified in the respective leases of the Tenants, if applicable. To the extent possible, Declarant shall use best efforts to bill all Licensees at the same time. The payment deadline of Tenants shall be as stated in their respective leases, if applicable. Otherwise, the payment deadline shall be ten calendar days after delivery of the bill by email, or after the post-mark if delivered by U.S. Mail and simple (non-amortized) interest at the legal rate for contracts shall begin accruing immediately thereafter pursuant to Civil Code section 3287 at the legal rate under Civil Code section 3289 (currently ten percent).

2. Owner of the Bowling Alley The annual license fee of the owner of the Bowling Alley shall be due no later than April 1. Simple (non-amortized) interest at the legal rate for contracts shall begin accruing immediately thereafter pursuant to Civil Code section 3287 at the legal rate under Civil Code section 3289 (currently ten percent). No bill shall be required, but Declarant shall confirm the amount owing within three business days if requested.

3. *Time Is of the Essence* Time is of the essence as to all payment deadlines mentioned in this Chapter.

D. Timely Payment Is a License Condition The consequence to Tenants of non-payment, partial payments, or late payments shall be as stated in their respective leases, if applicable. Otherwise, and in the case of the owner of the Bowling Alley Parcel, timely payment is both a condition and covenant of every license issued under these CC&R's. The failure of a Licensee to make timely payment shall constitute good cause for Declarant to temporarily revoke or permanently terminate said license by delivering notice of the same to Licensee. Any actual waiver under this paragraph on one or more occasions shall never be construed as a permanent waiver or estoppel as to future defaults.

CHAPTER FIVE: DECLARANT'S RESERVED RIGHTS

A. *Declarant Rulemaking* Declarant may make any rules for the benefit of the Common Areas of the

Shopping Center Parcel or that are necessary and proper to carry out these CC&R's, provided that they are not inconsistent with these CC&R's, resolutions, and ordinances. For example, and among other things, all Licensees shall be subject to the following rights and restrictions:

1. The right of Declarant to regulate the use any other facility of the Common Area of the Shopping Center Parcel and to adopt and enforce rules relating thereto.

2. The right of Declarant to adopt and enforce rules on the control and use of any driveways, sidewalks, entryway, and paving areas located on or across the Common Areas, including the right to regulate the kind of motorized or non- motorized vehicles, the speed of vehicles, and the parking of vehicles on such roadways or on the Common Areas. The Declarant is authorized to delegate to a municipality or other governmental entity or to contract with any private security or parking management company or private patrol company to exercise its authorized rights in connection with such private streets, roadways, and parking areas.

3. The right of Declarant to submit a revised Parking Management Plan, or other plans mentioned herein and to adopt said revisions upon approval of the City of Daly City, which may, among other things, limit the timing of parking in the Common Area and impose other rules or restrictions on the use of the Common Area of the Shopping Center Parcel.

4. The right of Declarant to develop and/or redevelop its lands provided that all such development or redevelopment shall comply with all zoning and building codes as have been adopted and approved by the City of Daly City.

B. *Right to Charge Fair Market Value for License Fees* Not more than once every ten years, Declarant reserves the right to update license fees charged to the owner of the Bowling Alley Parcel to the fair market value of the license conveyed by adjusting the base year value.

C. *Declarant's Own Use of Premises* Licensees shall not use their licenses so as to unduly interfere with the reserved rights of Declarant, including but not limited to using the Common Areas of the Shopping Center Parcel itself for ingress, egress, parking, or other purposes. Declarant and its authorized contractors or its agents shall have the right to enter the Common Area to perform its obligations under these CC&R's including obligations of construction, maintenance, or repair for the benefit of the Common Areas, or other areas of the Shopping Center Parcel. Entry and any continuing work on the Common Area shall be made with as little inconvenience as possible to Licensees and any damage caused by such entry, construction, or repair shall be repaired by Declarant. While such construction, maintenance, or repair is ongoing, Declarant may temporarily exclude Licensees, and their respective invitees from the area in which work is ongoing for the safety and security of all.

CHAPTER SIX: LICENSEE RESTRICTIONS AND RETAINED RESPONSIBILITIES

A. *Legal Uses Only* The Common Areas of the Shopping Center Parcel shall be used only for legal purposes and by Licensees operating legal, properly zoned and permitted businesses. No part of the Development shall be used or caused, allowed, or authorized to be used in any way, directly or indirectly, for any business purpose that is otherwise not permitted by the City. For instance, if the City of Daly City shall revoke or terminate a use permit, the rights of such Licensee under these CC&Rs, but not the responsibilities, of said Licensee shall terminate immediately.

B. *Responsibility for Utilities, etc. In Common Areas* Each Licensee shall be responsible for maintaining and repairing the mechanical, air conditioning, plumbing, sewer, electrical, heating, water, gas, cable television, drains and other lines, equipment, systems, and fixtures exclusively serving the Licensee's and/or the Tenant's premises. The Declarant shall be responsible for such services as serve the Common Areas of the Shopping Center Parcel, however the costs associated with such services shall be a cost of performance under Chapter Four above.

C. *Responsibility for Leased or Owned Property* Licensees shall maintain and repair their own property, whether leased or owned, including buildings near or adjacent to the Common Areas of the Shopping Center Parcel, and including any entryways that may extend into the Common Areas. All maintenance and repair work to be performed by Licensees under this paragraph shall be performed in a neat, clean, sanitary, workable, and attractive manner. This paragraph shall not be construed as modifying any obligation of Declarant or a Tenant under any lease between Declarant and that Tenant. Except in cases of emergency, any maintenance and repair that will interfere with the normal use of the Common Area of the Shopping Center Parcel shall be approved and scheduled with Declarant and Declarant may impose commercially reasonable conditions thereon.

D. *Property Damage & Nuisances Restrictions*

1. Damage to Common Areas No Licensee or their invitees or their tenants' invitees, shall injure or damage in any way any portion of the Common Area.

2. Nuisances No noxious or offensive activities which rise to the level of nuisance, including, but not limited to, repair of automobiles or other motorized vehicles, shall be conducted within the Common Areas. Nothing shall be done on or within the Common Area that may be or may become an annoyance or nuisance to the Declarant or Tenants, or that in any way interferes with the quiet enjoyment of the Shopping Center Parcel in such a manner as to rise to the level of nuisance.

3. Violations As Nuisance Every act or omission in violation of the use provisions of these CC&R's, plans approved by the City of Daly City in conformity therewith, or a license thereunder shall constitute a nuisance and, in addition to all other remedies set forth, may be abated or enjoined by Declarant.

CHAPTER SEVEN: INDEMNIFICATION, INSURANCE & SUBROGATION COVENANTS

A. *Indemnification For Negligence or Misconduct* Each Licensee shall be liable to Declarant for any damage to the Common Area or to Shopping Center Parcel that may be sustained by reason of the tortious acts or omissions (including but not limited to the willful misconduct or negligence) of the Licensee or their permitted users, including but not limited to their tenants or sub-tenants, employees, guests, and invitees. Each Licensee agrees to indemnify Declarant, and to hold Declarant harmless from, and to defend Declarant against, any claim for personal injury or property damage by such permitted users. Except that Licensees shall not be responsible to pay any damages against Declarant based solely upon: intentional torts committed by Declarant, grossly negligent acts or omissions by Declarant, or the active negligence of Declarant; nor shall Declarant attempt to pass on any such excepted damages to Licensees as a cost of performance under these CC&R's.

B. *Declarant's Liability Insurance* Declarant may obtain and maintain comprehensive public liability insurance insuring the Declarant against any liability incident to the ownership or management of the Common Area of the Shopping Center Parcel for the purpose of protecting Declarant and such insurance shall be deemed a cost of performance.

C. *Licensee's Liability Insurance* Tenants shall obtain and maintain such insurance as is required under their respective leases. Otherwise, and as to the owner of the Bowling Alley Parcel, Licensees shall procure at their own expense insurance for liability related to their license interests in the Common Areas of the Shopping Center Parcel with liability limits of not less than $1,000,000, and upon request of Declarant shall provide declarations pages and the policies themselves. If obtainable on commercially reasonable terms, Declarant shall cooperate with Licensees obtaining a cross-liability or severability-of-interest clause or endorsements. All insurance of Licensees shall be procured at each respective Licensee's sole expense.

D. *Declarant Has No Obligation to Procure Insurance for Licensees* Declarant shall NOT be obligated to obtain and maintain a master or blanket policy of fire insurance, commercial general liability, or any other form of insurance which would name any Licensee as an insured or additional insured.

E. *Subrogation Rights* Declarant and its insurer shall have a right of subrogation against any Licensee. To the extent insurance of any Licensee covers occurrences arising out of or related to the Common Areas of the Shopping Center Parcel or the Shopping Center Parcel itself, Licensee and its insurer shall have no rights of subrogation against Declarant.

CHAPTER EIGHT: FINANCING PROTECTIONS

A. *Mortgages & Deeds of Trust* Declarant may encumber the Shopping Center Parcel with a Mortgage or Deed of Trust. References herein to Mortgages shall apply likewise to Deeds of Trust, and references to Mortgagees shall apply likewise to Holders of Deeds of Trust.

B. *Subordination of Liens* Any lien created or claimed under these CC&R's is expressly made subject and subordinate to the rights of any first Mortgage that encumbers all or a portion of the Shopping Center Parcel or any part thereof, made in good faith and for value. No such lien shall in any way defeat, invalidate, or impair the obligation or priority of such first Mortgage unless the first Mortgagee expressly subordinates its interest, in writing, to such lien. If the Shopping Center Parcel or any part thereof is encumbered by a first Mortgage made in good faith and for value, the foreclosure of any lien created by any provision in the Declaration for assessments, or installments of assessments, shall not operate to affect or impair the lien of the first Mortgage. On acquisition of title to the Shopping Center Parcel or any part thereof pursuant to the remedies in a Mortgage or pursuant to foreclosure, the first Mortgagee shall not be liable for more than six months of the Shopping Center Parcel regular assessments accrued before acquisition of title by the first Mortgagee plus costs related to collection of the unpaid assessments. The subsequently levied assessments or other charges may include previously unpaid assessments, as long as Declarant, including the foreclosure-purchaser and his/her/its successors and assigns, are required to pay their proportionate share as provided in this Section.

C. *Subordination of these CC&R's and Any Licenses* These CC&R's and any licenses thereunder shall be subordinate to any and all loans, mortgages, deeds of trust, or other financing arrangements made in good faith and fair value, whether presently made, or made in the future, and whether recorded or not.

D. *Mortgage & Mortgagee Definitions* As used in these CC&R's, a "Mortgagee" shall mean either a mortgagee under a "Mortgage" or the beneficiary under a deed of trust and any holder, governmental guarantor, or insurer of a Mortgage. The term “Mortgage” means a recorded mortgage or deed of trust encumbering the Shopping Center Parcel or any part thereof, which is given as security by Declarant for the payment of money. An institutional Mortgagee is a Mortgagee that is a bank, savings and loan association, mortgage company, credit union, or other entity chartered or licensed under federal or state laws whose principal business is lending money on the security of real property or investing in such loans, or any insurance company or pension or profit-sharing trust or any federal or state agency or instrumentality, including, without limitation, the Federal National Mortgage Association, the Federal Home Loan Mortgage Corporation, the Federal Housing Administration and the Veterans Administration, or any purchaser of a Mortgage originated by an institutional Mortgagee.

CHAPTER NINE: DISPUTE RESOLUTION

A. *Judicial Actions* Declarant shall have the power to commence and maintain judicial actions to collect damages and to restrain and enjoin any actual or threatened breach of any provision of these CC&R's, any related plan approved by the City of Daly City, any license under these CC&R's, or for violation of any other rules promulgated by Declarant under these CC&R's or its reserved rights. Licensees agree that damages alone are not an adequate remedy for violations. All complaints seeking

mandatory or prohibitory injunctions must be filed in the Superior Court of California in and for the County of San Mateo or the U.S. District Court for Northern California in San Francisco.

B. *Small Claims Court* All claims for damages equal to or less than the maximum allowed to be awarded in Small Claims Court (currently $5,000 per Code of Civil Procedure §116.220, or $10,000 by a natural person under Code of Civil Procedure § 116.221) shall be commenced in the Small Claims Court Division of the San Mateo County Superior Court.

C. *Arbitration* Any claims for declaratory relief or damages above the Small Claims Court limit shall, at the election of the plaintiff, be arbitrated. The party requesting arbitration shall submit the names of three arbitrators with any request for arbitration. If one of the arbitrators is not mutually selected within three business days, the party requesting arbitration shall initiate a claim with the American Arbitration Association, JAMS San Francisco, ADR, Services, Inc., or by filing a petition to compel arbitration in court. Any arbitrator selected must be a retired judge with significant experience handling commercial real estate disputes. The cost of arbitration shall be split evenly among the parties until an award on the merits is made. Pursuant to Code of Civil Procedure section 1284.2, the arbitrator shall have jurisdiction and discretion to order that the prevailing party be reimbursed by the losing party for the costs and fees paid to the arbitrator.

D. *Attorney's Fees Not Recoverable* These CC&R's shall not be construed as authorizing contractual attorney's fees.

CHAPTER TEN: MODIFICATIONS, REVISIONS, AND TERMINATION

A. *CC&R's Run With the Land* These CC&R's are intended to be binding on Declarant and Declarant's successors and assigns so as to run with the Common Areas of the Shopping Center Parcel.

B. *Termination* These CC&R's shall terminate if and when the City of Daly City by ordinance or resolution declares that CC&R's are no longer required for the Common Area of the Shopping Center Parcel.

C. *Revisions & Modifications* Minor or substantial revisions to these CC&R's or plans required thereunder may be made at the request of Declarant, and shall become binding modifications if approved by the City of Daly City. Such revisions may be requested for any reason, and should be liberally approved to address practical problems encountered by Declarant managing the Common Area of the Shopping Center Parcel. The City of Daly City may approve revisions for an interim period to see whether or not the proposed revisions solve a particular problem. A license under these CC&R's shall not be deemed to be a vested right; rights created by these CC&R's are intended to be in the nature of a mere revocable conditional license to use the Common Areas of the Shopping Center Parcel in compliance with these CC&R's and with the understanding that such CC&R's may be modified by the City of Daly City upon the consensual request of the Declarant.

D. *Maintenance of Documents* These CC&R's and all modifications thereto shall be recorded in the Official Records of San Mateo County with a copy filed with the City Clerk and maintained by the Planning Department. The original copies of such instruments shall be maintained by Declarant. Plans approved by the City of Daly City under these CC&R's shall be maintained by the Planning Department, and may at the election of Declarant be attached as exhibits to these CC&R's or any modifications thereto. Copies of all such documentation shall be available for inspection by the public at the Planning Department.

CHAPTER ELEVEN: NOTICES

A. *Notices* Any and all communications required or permitted to be given by the Declarant shall be deemed to be duly made immediately upon delivery by electronic mail, or within three days if delivery by US Mail. Mailing addresses may be changed at any time on written notification to the Declarant. Notices shall be deemed received 48 hours after mailing if mailed to the transferee, by certified mail, return receipt requested, at the following mailing address: 1534 Plaza Lane, Suite 326 Burlingame, CA 94010.

Signature page follows.

IN WITNESS WHEREOF this Declaration is hereby executed as authorized by the Owners of the respective Parcels:

KPC, LLC:

King Plaza Center, LLC, a Delaware limited liability company
Its sole Member

By: 950 King Drive, LLC, a Delaware limited liability company, its sole member

By: _____

Wai Man Ho, Co-Trustee of the Ho Family Trust dated July 1, 1993 Its Sole Member

By: _____

Tammy Ho, Co-Trustee of the Ho Family Trust dated July 1, 1993 Its Sole Member

EXHIBIT A

PROPERTY DESCRIPTION
SHOPPING CENTER PARCEL
APN 091-175-220

The land referred to is situated in the County of San Mateo, City of Daly City, State of California, and is described as follows:

Being portions of Block 7, as shown on that certain Map entitled "Serramonte, Unit No. 1, Daly City, San Mateo County, California", recorded Jun 17, 1965, in Book 62 of Maps, at Pages 29 to 31, inclusive, in the Office of the County Recorder of the County of San Mateo, and more particularly described as follows:

Beginning at the Westerly end of the 15 Foot radius curve connecting to the Southerly line of Warwick Street with the Westerly line of Shipley Avenue as shown on the Map referenced above; thence Easterly and Southerly along the Westerly line of Shipley Avenue on a curve to the right from a tangent which bears North 87° 30' 00" East, with a radius of 15 Feet, through a central angle of 90°, an arc distance of 23.56 Feet; thence South 2° 30' 00" East 160.84 Feet; thence leaving said Westerly line of Shipley Avenue South 87° 30' 00" West 49.78 Feet; thence South 2° 30' 00" East 6.10 Feet; thence South 87° 30' 00" West 58.10 Feet; thence North 2° 30' 00" West 4.50 Feet; thence South 87° 30' 00" West 5.30 Feet; thence North 2° 30' 00" West 15.50 Feet; thence South 87° 30' 00" West 7.30 Feet; thence South 2° 30' 00" East 15.50 Feet; thence South 87° 30' 00" West 4.40 Feet; thence South 2° 30' 00" East 4.50 Feet; thence South 87° 30' 00" West 28.00 Feet; thence South 2° 30' 00" East 392.04 Feet to a point on the Northerly line of King Drive; thence Westerly, Northerly and Easterly along the Northerly line of King Drive, the Easterly line of Callan Boulevard and Southerly line of Warwick Street on a curve to left from a tangent which bears North 84° 56' 55" West, with a radius of 680 Feet, through a central angle of 18° 42' 01", an arc distance of 221.94 Feet; thence on a tangent curve to the right with a radius of 30 Feet; through a central angle of 85° 27' 34", an arc distance of 44.75 Feet; thence on a tangent curve to the right with a radius of 710 Feet, through a central angle of 15° 41' 22", an arc distance of 194.42 Feet; thence North 2° 30' 00" West 337.60 Feet; thence on a tangent curve to the right with a radius of 30 Feet, through a central angle of 90°, an arc distance of 47.12 Feet; thence North 87° 30' 00" East 389.86 Feet to the point of beginning.

APN 091-175-220

JPN 091-017-175-15A
091-017-175-18A
091-017-175-19A

Exhibit B

PROPERTY DESCRIPTION
BOWLING ALLEY PARCEL
APN 091-175-200

The land referred to is described as follows: Land situated in the City of Daly City, County of San Mateo, State of California, described as follows:

BEING PORTIONS OF BLOCK 7, AS SHOWN ON THAT CERTAIN MAP ENTITLED "SERRAMONTE, UNIT NO. 1, DALY CITY, SAN MATEO COUNTY, CALIFORNIA", RECORDED JUNE 17, 1965, IN BOOK 62 OF MAPS, AT PAGES 29 TO 31, INCLUSIVE, IN THE OFFICE OF THE COUNTY RECORDER OF THE COUNTY OF SAN MATEO, AND MORE PARTICULARLY DESCRIBED AS FOLLOWS:

COMMENCING AT THE WESTERLY END OF THE 15 FOOT RADIUS CURVE CONNECTING THE SOUTHERLY LINE OF WARWICK STREET WITH THE WESTERLY LINE OF SHIPLEY AVENUE AS SHOWN ON THE MAP REFERENCED ABOVE; THENCE EASTERLY AND SOUTHERLY ALONG THE WESTERLY LINE OF SHIPLEY AVENUE ON A CURVE TO THE RIGHT FROM A TANGENT WHICH BEARS N 87° 30' 00" E, WITH A RADIUS OF 15 FEET, THROUGH A CENTRAL ANGLE OF 90°, AN ARC DISTANCE OF 23.56 FEET; THENCE S 2° 30' 00" E 160.84 FEET TO THE TRUE POINT OF BEGINNING; THENCE ALONG SAID WESTERLY LINE OF SHIPLEY AVENUE AND THE NORTHERLY LINE OF KING DRIVE S. 2° 30' 00" E 292.68 FEET; THENCE ON A TANGENT CURVE TO THE RIGHT WITH A RADIUS OF 470 FEET; THROUGH A CENTRAL ANGLE OF 12° 57' 10", AN ARC DISTANCE OF 106.25 FEET; THENCE ON A TANGENT CURVE TO RIGHT WITH A RADIUS OF 30 FEET, THROUGH A CENTRAL ANGLE OF 93° 29' 46", AN ARC DISTANCE OF 48.95 FEET; THENCE ON A TANGENT CURVE TO THE LEFT WITH A RADIUS OF 680 FEET; THROUGH A CENTRAL ANGLE OF 08° 53' 51", AN ARC DISTANCE OF 105.60 FEET; THENCE LEAVING THE NORTHERLY LINE OF KING DRIVE AND PROCEEDING N 2° 30' 00" W 392.04 FEET; THENCE N 87° 30' 00" E 28.00 FEET; THENCE N 2° 30' 00" W 4.50 FEET; THENCE N 87° 30' 00" E 4.40 FEET; THENCE N 2° 30' 00" W 15.50 FEET; THENCE N 87° 30' 00" E 7.30 FEET; THENCE S 2° 30' 00" E 15.50 FEET; THENCE N 87° 30' 00" E 5.30 FEET; THENCE S 2° 30' 00" E 4.50 FEET; THENCE N 87° 30' 00" E 58.10 FEET; THENCE N 2° 30' 00" W 6.10 FEET; THENCE N 87° 30' 00" E 49.78 FEET TO THE TRUE POINT OF BEGINNING.

PROPERTY ADDRESS: 900 KING PLAZA, DALY CITY CA 94015

APN: 091-175-200